Evaluation Results of a new EUV Reticle Pod having Reticle Grounding Paths

Kazuya Ota, Masami Yonekawa, Mitsuaki Amemiya,
Takao Taguchi and Osamu Suga

MIRAI-Semiconductor Leading Edge Technologies, Inc.

2010/10/18@Kobe

Semiconductor Leading Edge Technologies, Inc.

Table of contents

1. The necessity of reticle grounding in EUVL pods
   1-1. Static charge problems and SEMI requirements
   1-2. Selete's reported data to show the necessity of grounding (1)
   1-3. Selete's reported data to show the necessity of grounding (2)
2. A new EUVL pod having reticle grounding paths
   2-1. Evaluation of grounding mechanisms
   2-1. "cnPod" and "cnPod/ESD"
3. Experimental method and data
   3-1. Method of charging a substrate in "cnPod"
   3-2. Method of charging a substrate in "cnPod/ESD"
   3-3. Particle adders in a particle inspection tool
   3-4. Particle adders during storage ~ both sides coated substrates
   3-5. Particle adders during storage ~ single side coated substrates
   3-6. Particle adders during vacuum tool handling
4. Potential modification of SEMI standards
5. Summary

1-1. Static charge problems and SEMI requirements

- Electrostatic discharge (ESD) causes damage to the reticle patterns.

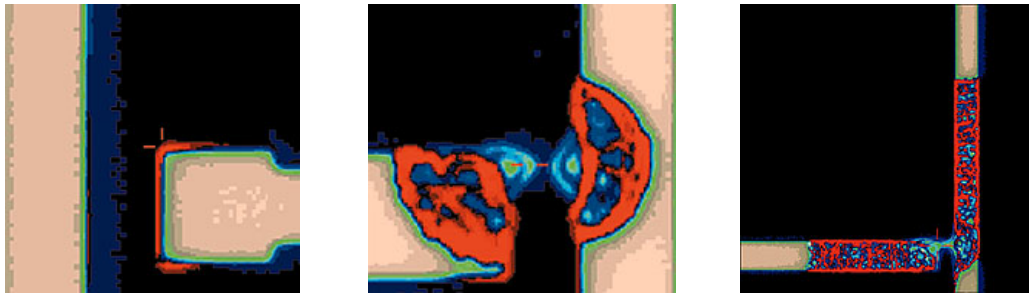

Photos from "Investigating a new generation of ESD-induced reticle defects", James Wiley, KLA-Tencor; and Arnold Steinman, Ion Systems, http://www.micromagazine.com/

- Electrostatic attraction (ESA) causes particulate contamination on the reticle.

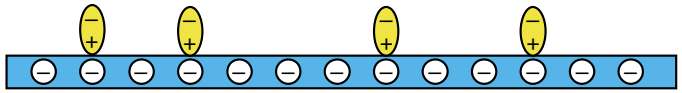

- Related SEMI standards.
  - SEMI E78 "Guide to Assess and Control Electrostatic Discharge (ESD) and Electrostatic Attraction (ESA) for Equipment"
  - SEMI E129 "Guide to Assess and Control Electrostatic Charge in a Semiconductor Manufacturing Facility"
  - Related information in SEMI E152 "Mechanical Specification of EUV Pod for 150 mm EUVL Reticles"
    - An electrical connection between the front and back sides of EUVL reticles as well as the electrical connection to the reticle backside from outside the outer pod may be needed and specified in future.

1-2. Selete's reported data to show the necessity of grounding (1)

Relationship between Potential and Particle Adders(2)

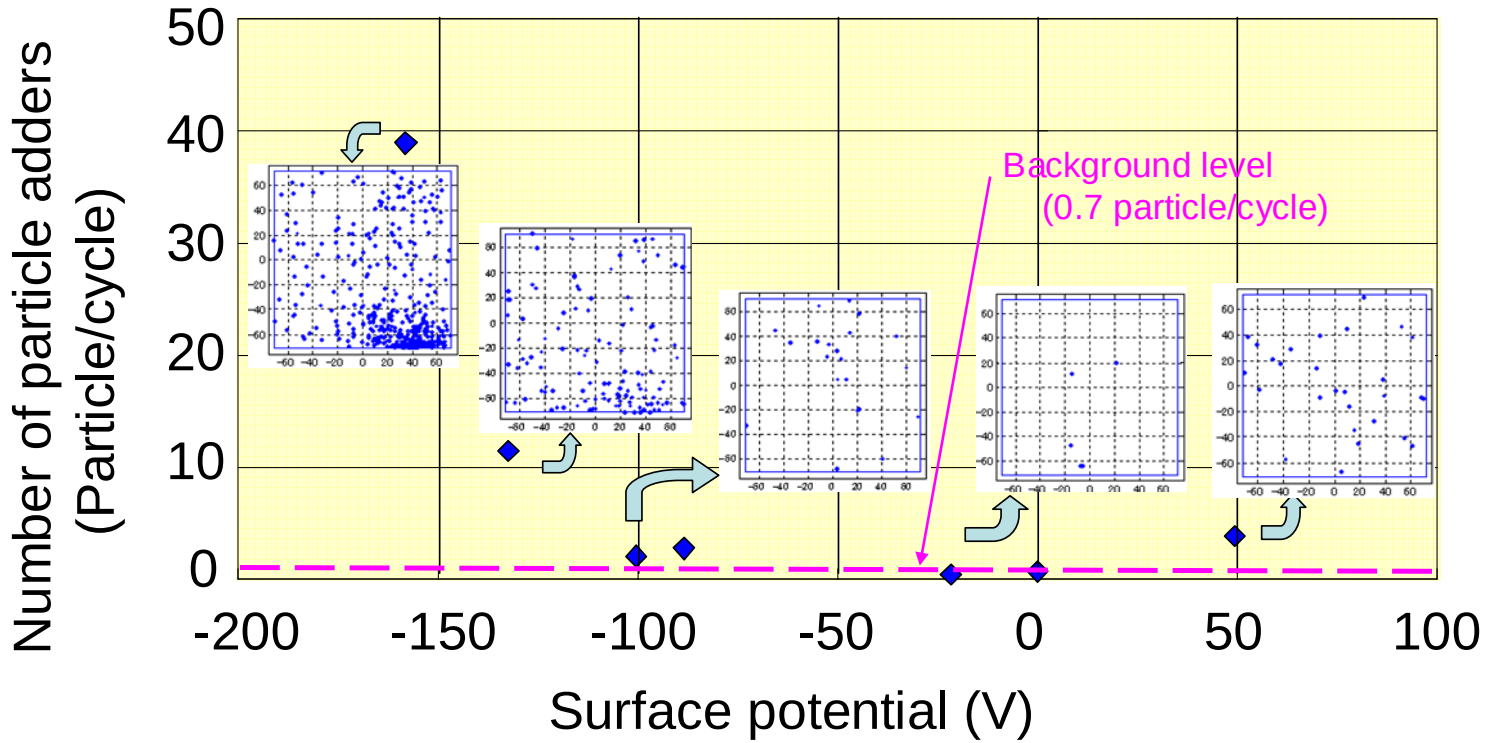

We can observe that the number of particle adders is related to the surface potential and that charge-up certainly leads to adhesion of particles.

SPIE Advanced Lithography 2009

"Experimental Study of Particle-free Mask Handling", Mitsuaki Amemiya, Kazuya Ota, Takao Taguchi and Osamu Suga, Proc. of SPIE Vol. 7271, 72713G (2009).

1-3. Selete's reported data to show the necessity of grounding (2)

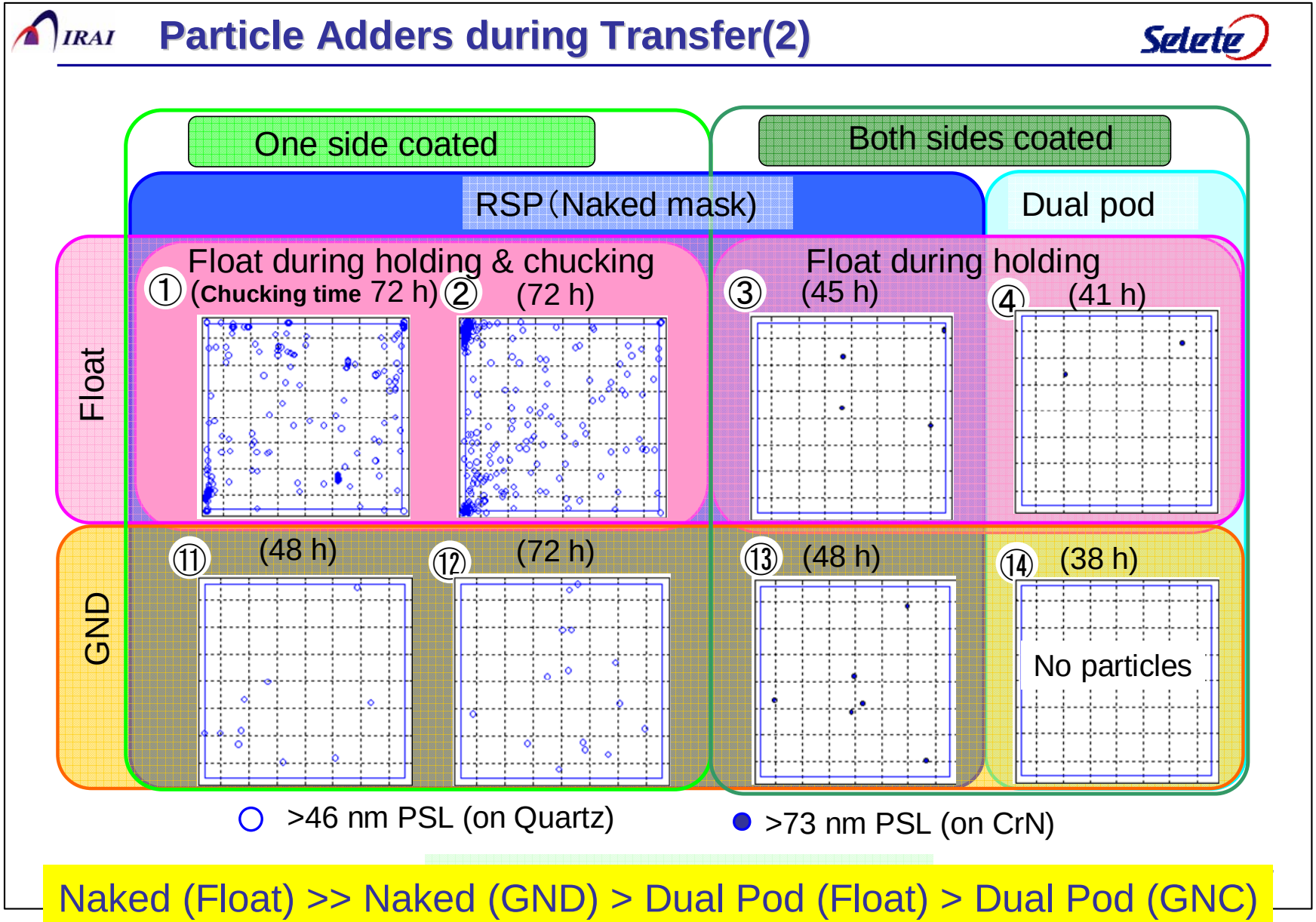

Naked (Float) >> Naked (GND) > Dual Pod (Float) > Dual Pod (GNC)

"Experimental Study of Particle-free Mask Handling", Mitsuaki Amemiya, Kazuya Ota, Takao Taguchi and Osamu Suga, Proc. of SPIE Vol. 7271, 72713G (2009).

2-1. Evaluation of grounding mechanisms

- Soft contact
  - Conductive polyimide spheres
  - Contact resistance
    - Very good <1kΩ: Ru, CrN
    - Good <10kΩ: Si, Cr
    - **Bad ∞: LR-TaBN (=TaBO)**
  - Contact marks on the reticle but no scattered particles observed.
- Hard contact
  - Metal stylus
  - Contact resistance
    - Very good <1kΩ: all
  - **Particles scattered within range of several cm.**

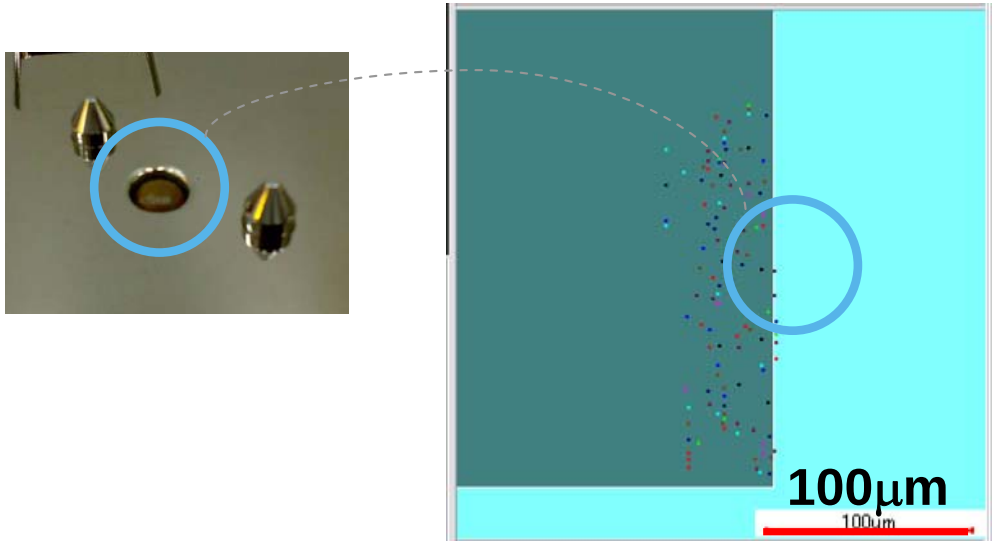

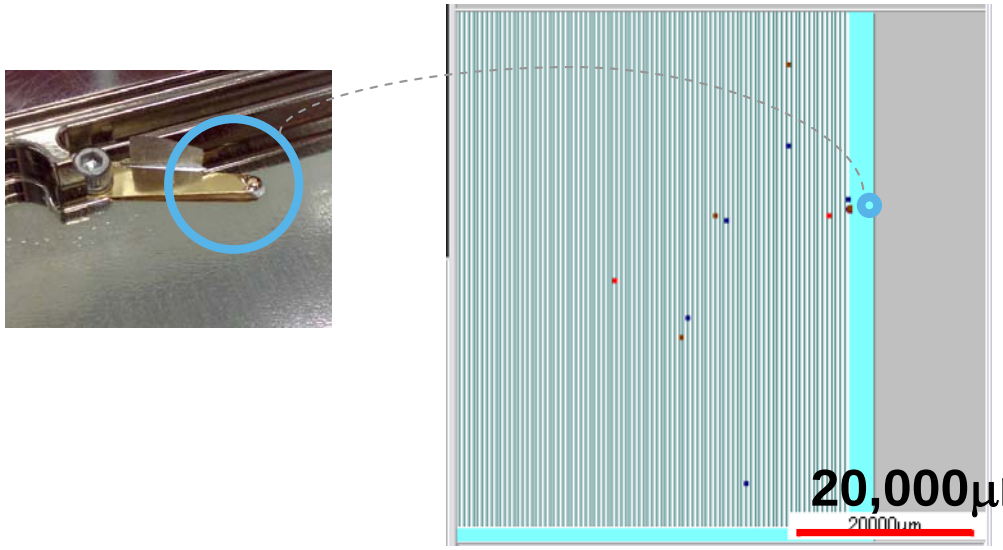

2-2. "cnPod" and "cnPod/ESD"

"cnPod" = SEMI Compliant EUV Pod
Developed by Canon, Nikon and Entegris

Outer pod

Inner pod

Grounding mechanisms were installed in "cnPod" ➔ "cnPod/ESD"

3-1. Method of charging a substrate in "cnPod"

Both sides coated

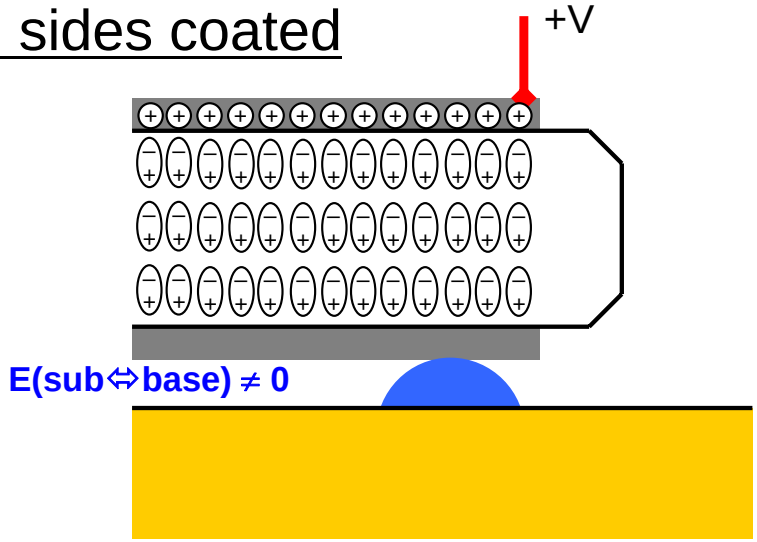

Voltage applied

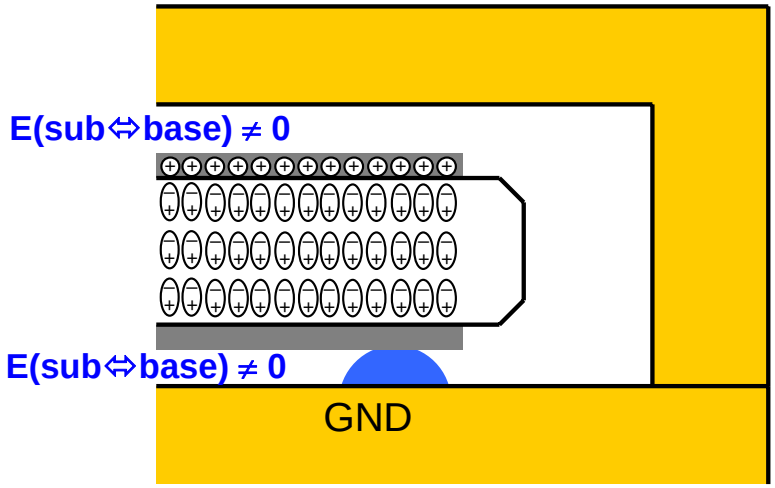

Cover closed

Single side coated

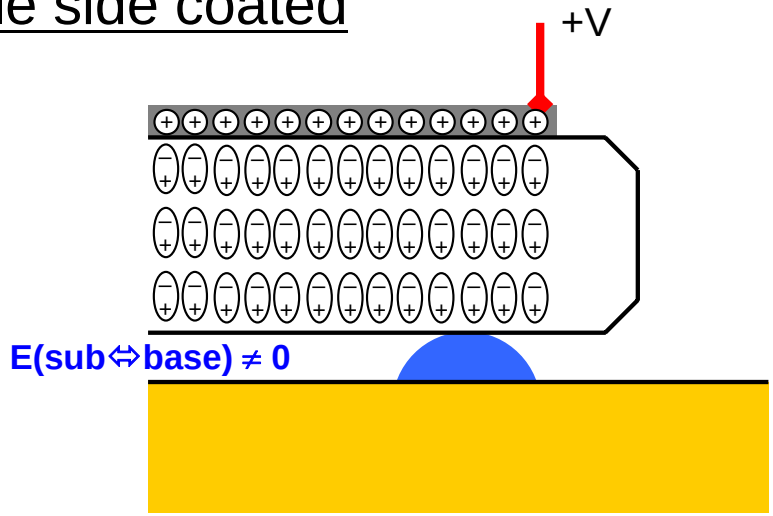

Voltage applied

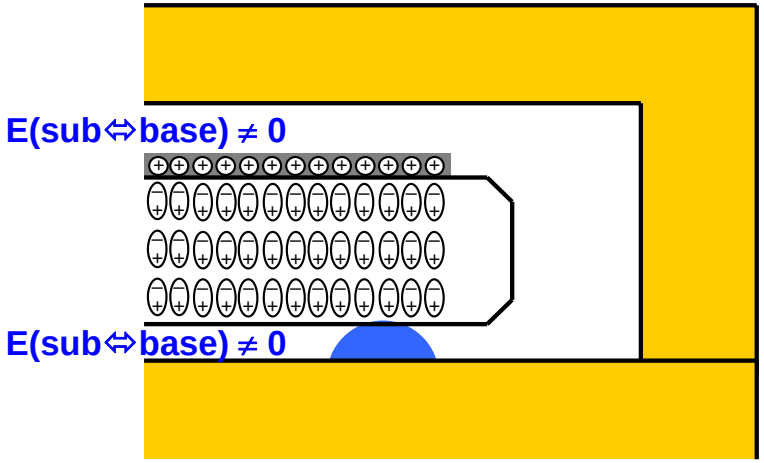

Cover closed

3-2. Method of charging a substrate in "cnPod/ESD"

Both sides coated

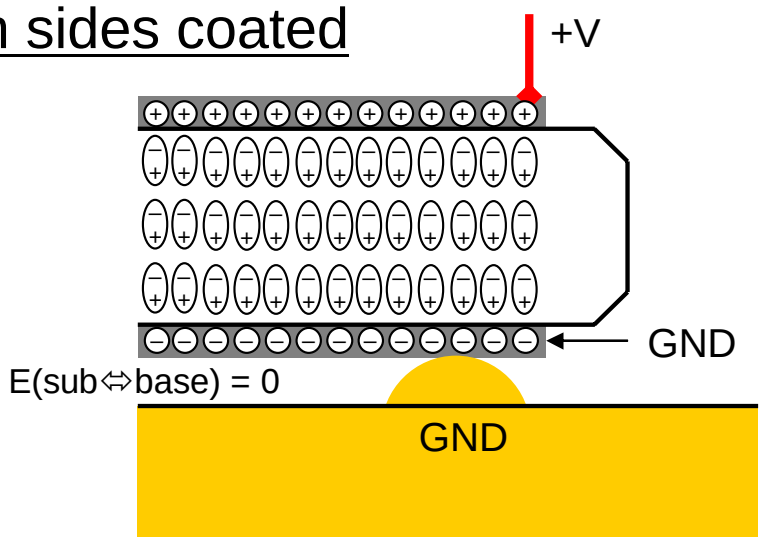

Voltage applied

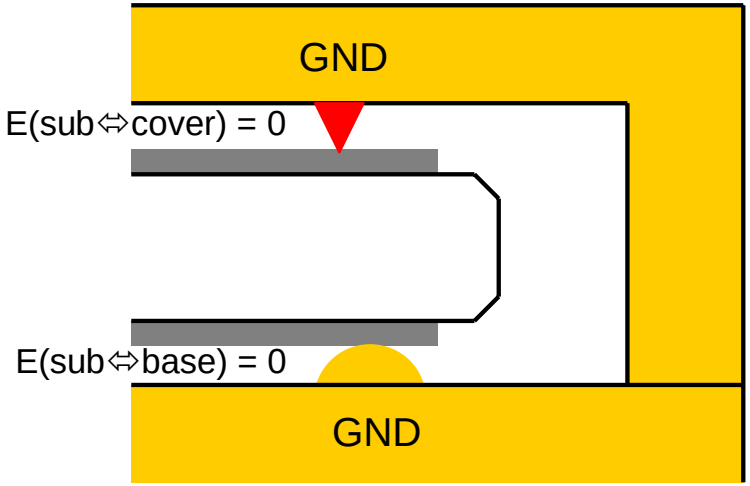

Cover closed

Single side coated

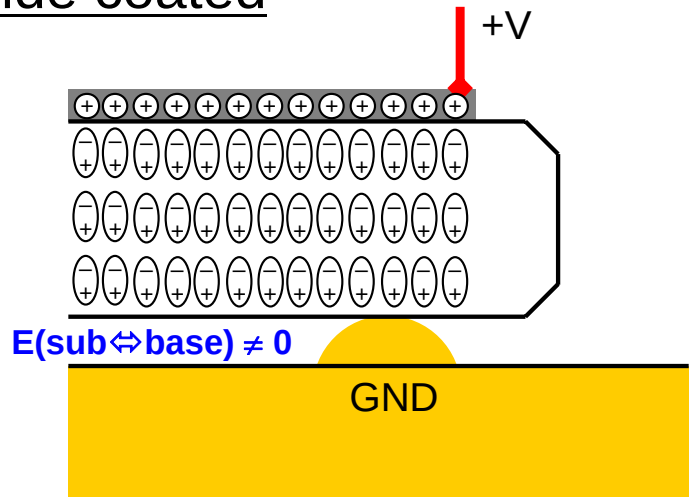

Voltage applied

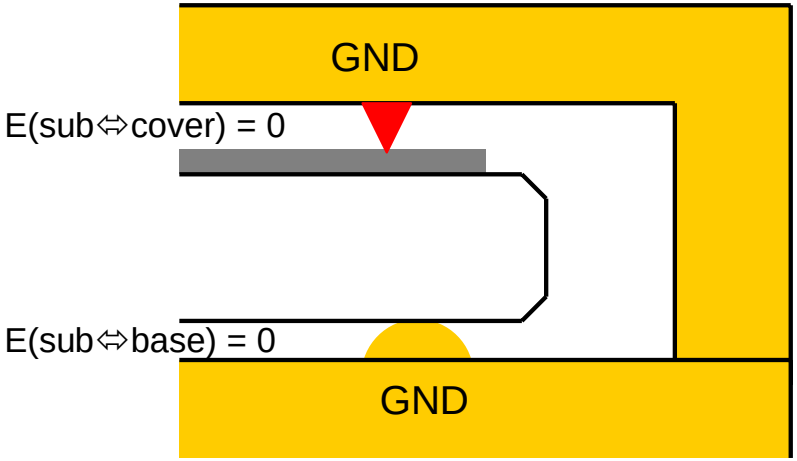

Cover closed

3-3. Particle adders in a particle inspection tool

Single side coated substrates were used.

cnPod/Trial 1 **Not cnPod/ESD** **cnPod/Trial 2**

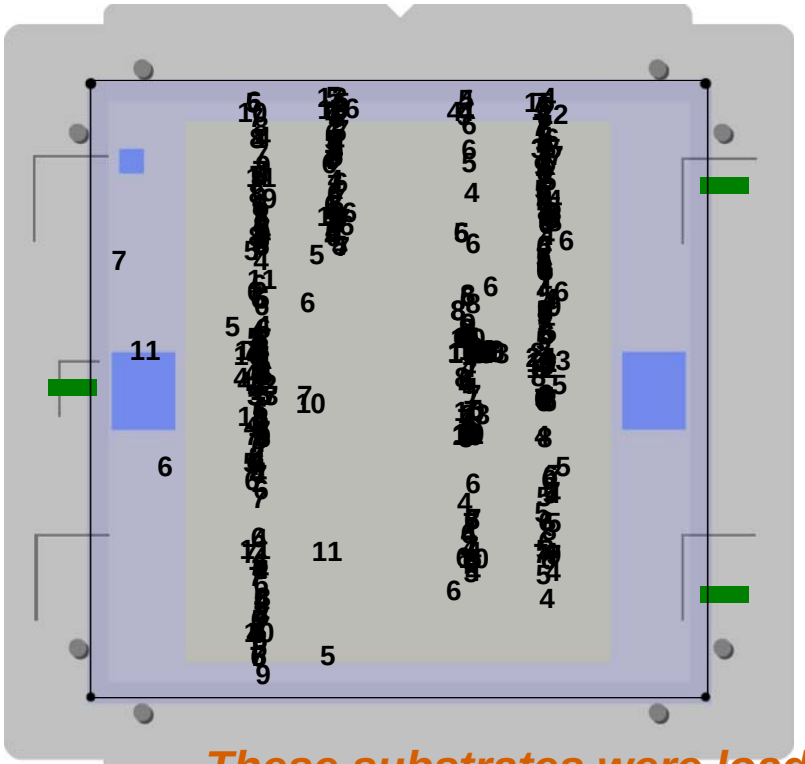

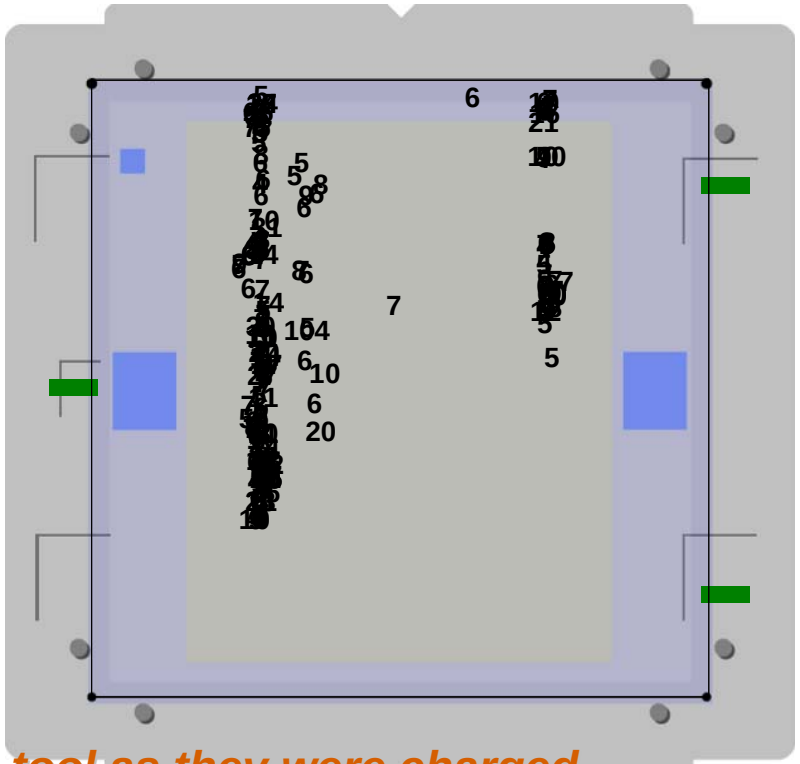

These substrates were loaded into the tool as they were charged.

M3350 grippers

46nm PSL Eq., M3350

Many particles were added along the robot hand of the inspection tool.

3-4. Particle adders during storage ~ both sides coated substrates

Periods of storage were about 3 to 5 days.

cnPod/ESD

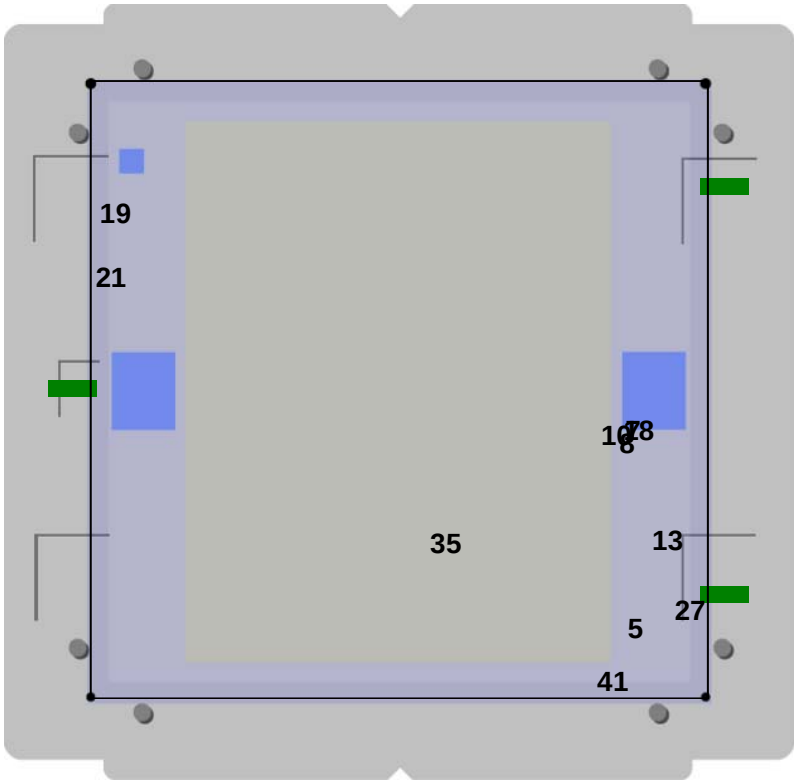

6 data are superimposed

cnPod

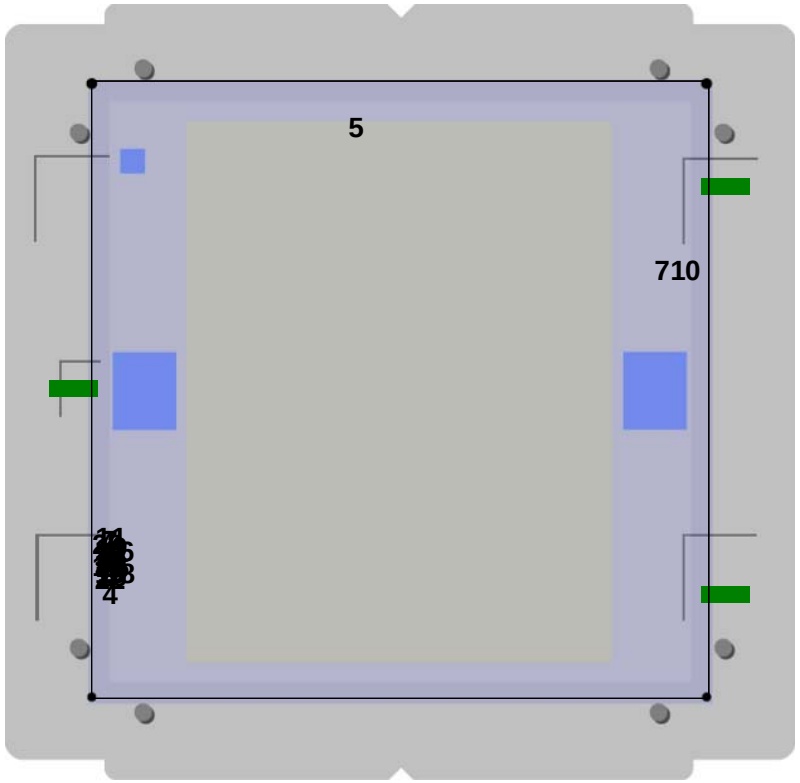

4 data are superimposed

M3350 grippers

75nm PSL Eq., M3350

No significant difference of the numbers of adders between the two types of pods.

3-5. Particle adders during storage ~ single side coated substrates

Periods of storage were about 3 to 5 days.

cnPod/ESD **cnPod**

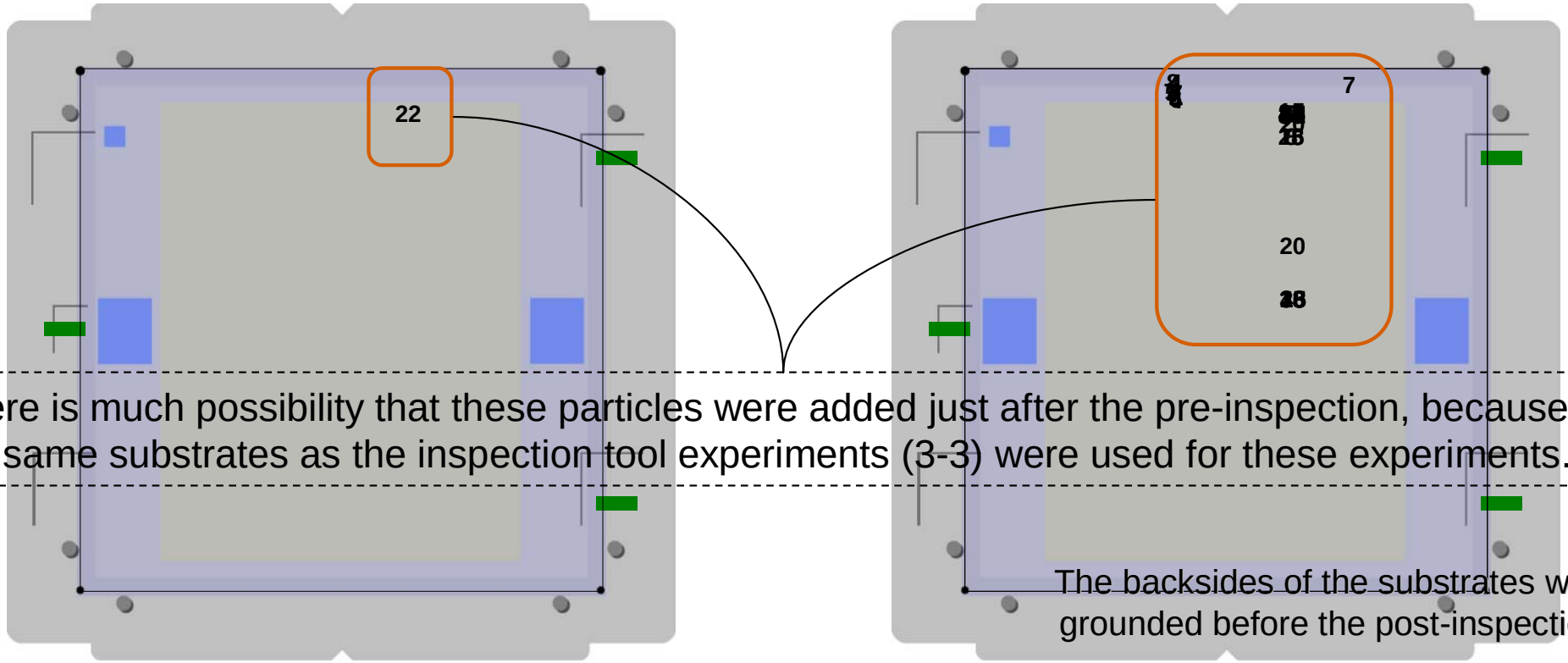

There is much possibility that these particles were added just after the pre-inspection, because the same substrates as the inspection tool experiments (3-3) were used for these experiments.

The backsides of the substrates were grounded before the post-inspection.

5 data are superimposed

2 data are superimposed

M3350 grippers

46nm PSL Eq., M3350

No significant difference of the numbers of adders between the two types of pods.

3-6. Particle adders during vacuum tool handling

Not cnPod/ESD

cnPod without inner cover open/close

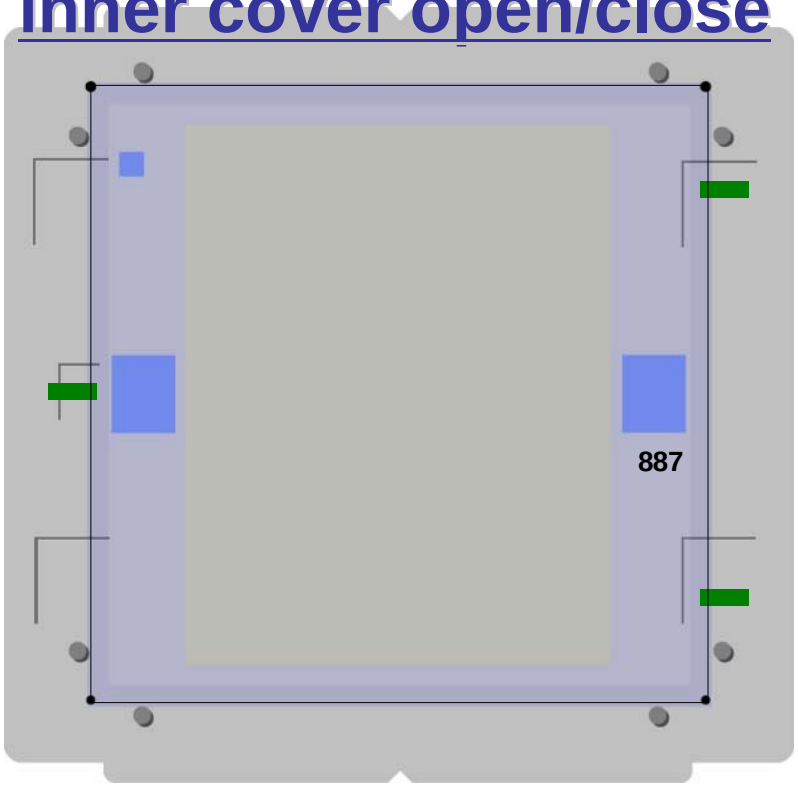

1,419 cycles

cnPod with innner cover open/close (Full Path)

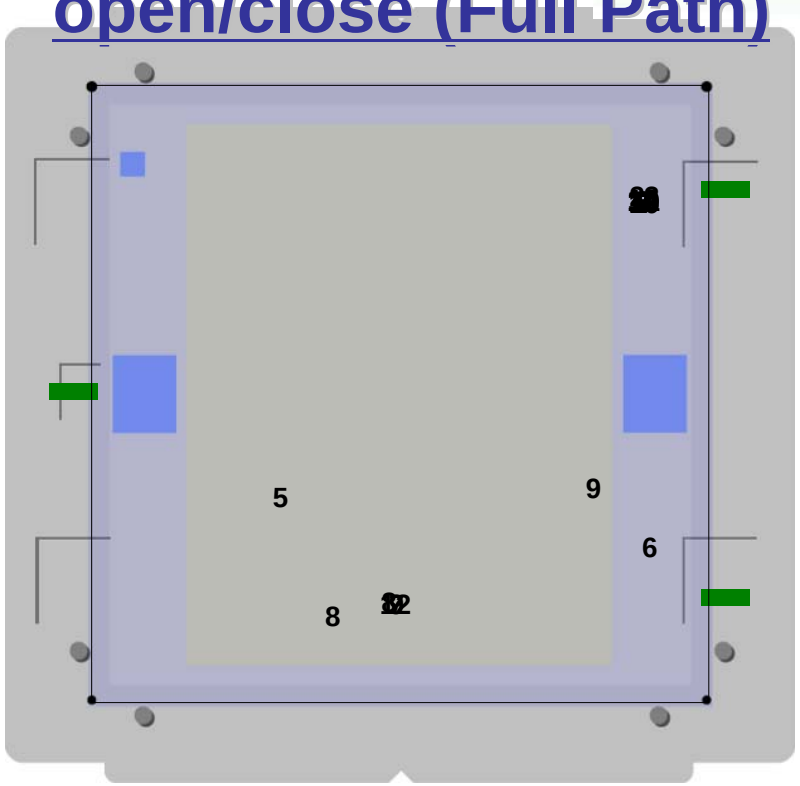

366 cycles (8 adders)
0.022/cycle

M3350 grippers

About five times as many as particles were observed compared with non-charged substrates (0.004/cycle*). *More data needed.*

*SPIE2010

4. Potential modification of SEMI standards

- Locations for grounding
  - Grounding locations should be specified in SEMI P37(Mask) and E152 (Pod).
- Film properties at the grounding locations
  - Film properties at the grounding locations should be specified in SEMI P37 so that the soft contact mechanism can be used.
- Necessity of an electrical connection between the front and back sides of EUVL reticles
  - If EUVL reticles have an electrical connection between the front and back sides, the reticles can be grounded only from the back side and the requirements for film properties on the front side of the reticles can be relaxed.

5. Summary

- A new EUV reticle pod "cnPod/ESD" having reticle grounding paths was developed by Canon, Nikon and Entegris. Selete evaluated the performance of "cnPod/ESD" compared with "cnPod" which didn't have any grounding paths.
- "cnPod/ESD" demonstrated better particle protective performance than "cnPod". Particles can be easily added when a charged substrate was removed from the pod.
- SEMI P37 and E152 should be modified for reticle grounding: grounding locations and film properties.

Acknowledgements

- We appreciate the effort of Takashi Kamono (Canon) and Yukiharu Okubo (Nikon), David Halbmaier (Entegris) and John Lystad (Entegris) in developing and supplying the cnPods.
- This work is supported by NEDO as a part of the EUV mask program.