Development of Particle-free Mask Handling Techniques using MPE Tool

Mitsuaki Amemiya, Kazuya Ota, Takao Taguchi, Takashi Kamono, Naosuke Nishimura, Tadahiko Takikawa, Youichi Usui and Osamu Suga

28-31/10/2007 @Sapporo

Semiconductor Leading Edge Technologies, Inc.

Outline

1. Introduction
2. Experimental Tool
3. What is a dual Pod ?
4. Transfer Experiments
   - 4-1. Particle adders in Air & L/L
   - 4-2. Particle adders in vacuum path
   - 4-3. Distribution of all particles adhered in all experiments
   - 4-4. Dependence of particle adders on cleanliness in the outside

Summary

Acknowledgements

1. Introduction

Issue

It is difficult to use a pellicle in EUV lithography because of its high absorption. Therefore particle free handling technique is one of challenging issues. A dual pod was proposed as one of the solutions of this issue [1].

(1)Y. Gomei, et al., “EUVL mask dual pods to be used for mask shipping and handling in exposure tools” SPIE 6517 (2007) 65170W.

Objectives of this work

Dual pod evaluation

We have studied particle adders on a mask blank using Mask Protection Engineering tool (MPE tool). We have compared a difference in particle adders between a dual pod carrier and a naked mask blank. In this conference, we describe a potential of the dual pod carrier with experimental results obtained using the MPE tool.

2. Experimental Tool

What is Mask Protection Engineering tool (MPE tool) ?

1. Purpose

An apparatus to simulate the transfer of an EUV mask in an exposure tool. We try to establish particle free mask transfer- and storage-technology through the analysis of particle release or adhesion mechanism, particle-protection and evaluation of various carriers.

Particle Inspection (in M3350) → Blank → Mask transport Experiment (in the MPE tool) → Blank → Particle Inspection (in M3350)

Pre-scan

Post-scan

Particle adders = “Post-scan” – “ Pre-scan”

The particle inspection tool (Lasertech M3350) has a sensitivity of 46nm PSL.

2. Construction

Units : Unit in air (EFEM)
Load lock chamber
Unit in Vacuum (Transfer- , Opener-, ESC-chamber)

Carrier: RSP200 Pod , Dual Pod

MPE tool Overview

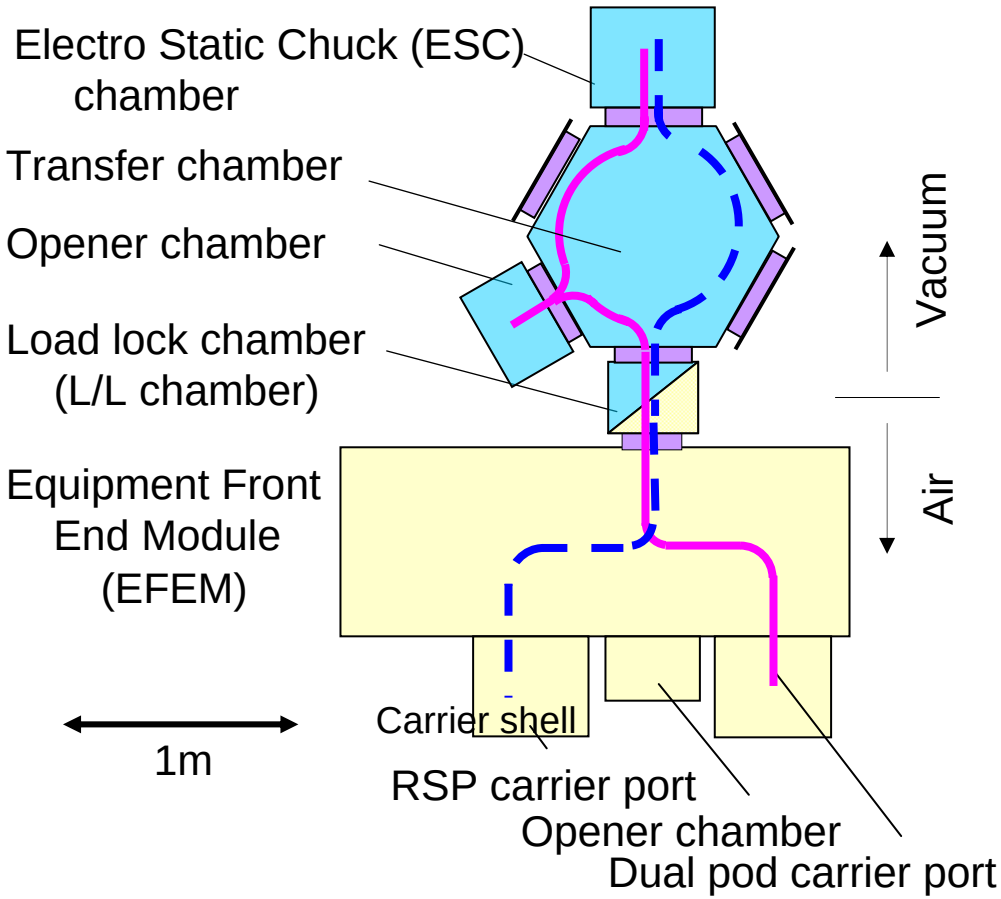

Mask Flow in a Dual Pod

Mask Flow in an RSP200 Pod

MPE tool Photography

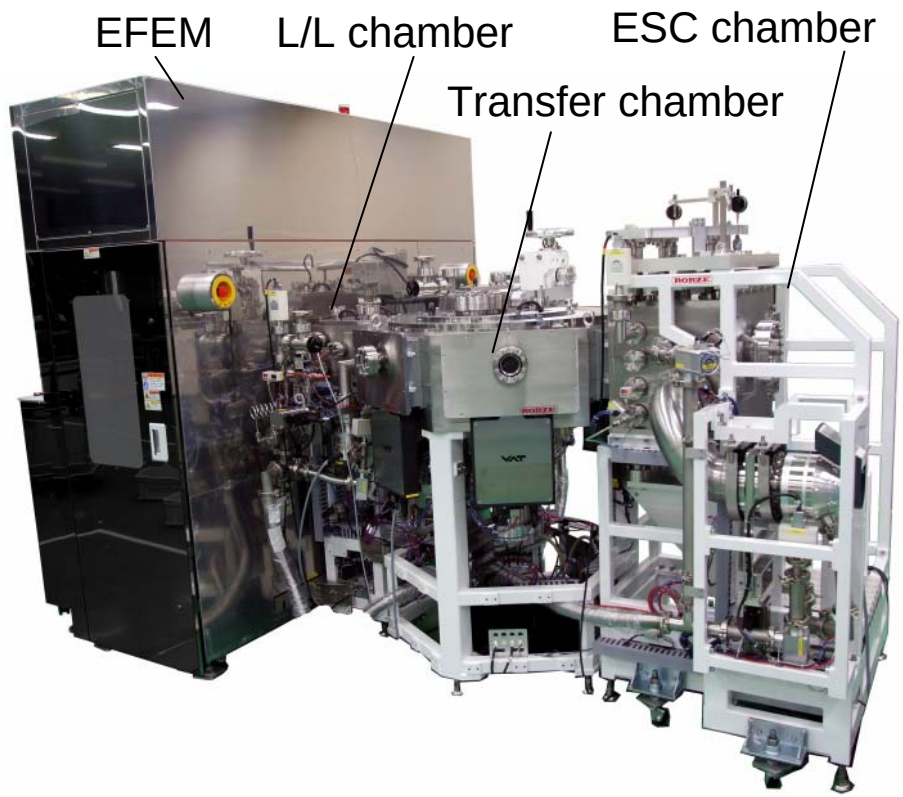

3. What is a Dual Pod ?

Dual Pod Concept

Source :EUV mask carrier standard workshop @ San Jose, Feb.

1. Reticle in Inner pod in Carrier (reticle SMIF pod - RSF
2. Inner pod protects the reticle in loadlocks.
3. Inner cover stays with reticle during in-tool handling.
4. Reticle remains in Inner pod in library to protect against vacuum accidents and contamination.

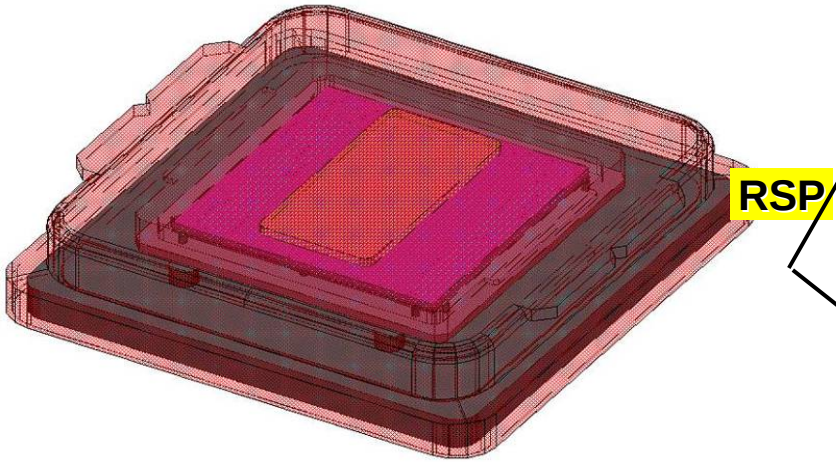

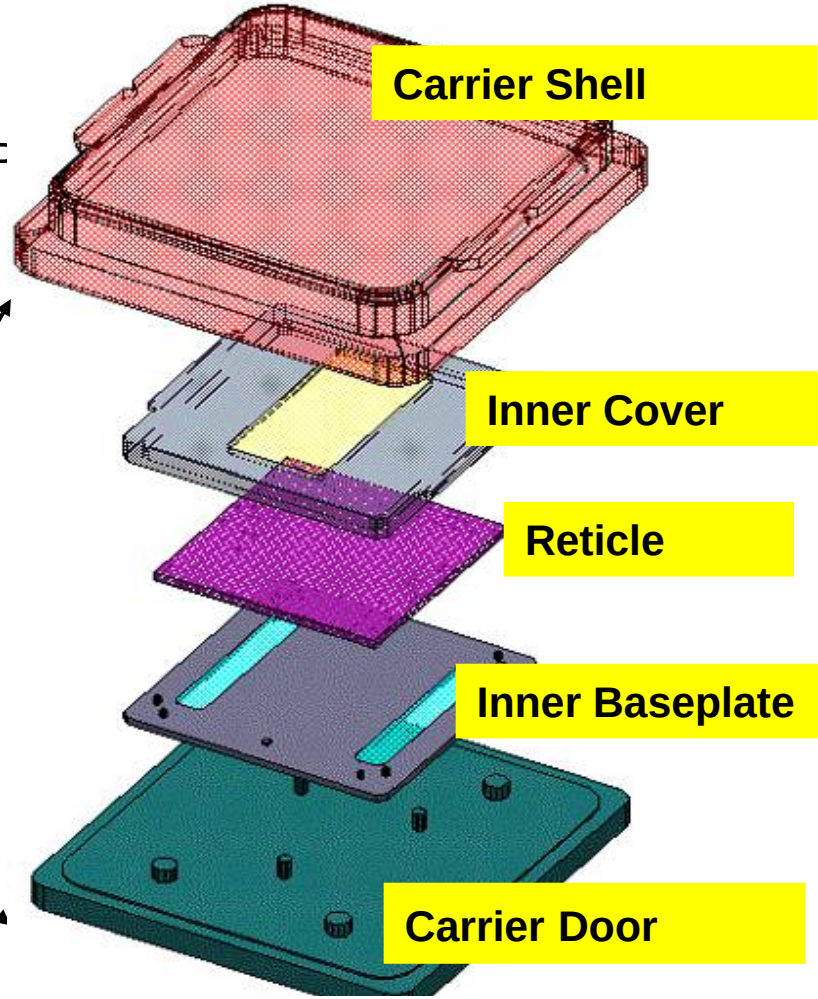

In this work (EUV symposium 2007), we called above components as follows:

Dual Pod { Carrier (Carrier Shell + Carrier Door)
Inner Pod (Inner Cover + Inner Baseplate)

Mask Flow of Dual Pod

(1) An inner pod is taken out from a carrier (RSP-Pod).

(2) The inner pod is transferred to a load lock chamber.
The load lock chamber is evacuated.

(3) The inner pod is transferred to an opener chamber.
An inner cover is taken off from an inner baseplate.

(4) The inner baseplate is transferred to the ESC chamber.
The baseplate with a blank is lifted up to ESC by a robotic arm.
After the blank on the baseplate is chucked on the ESC, the baseplate is taken off.

<u>A robotic arm never touch the blank directly over all path.</u>

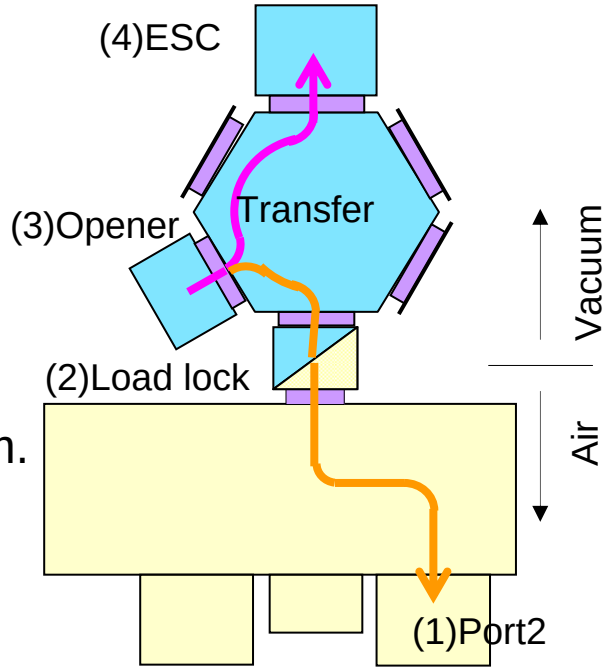

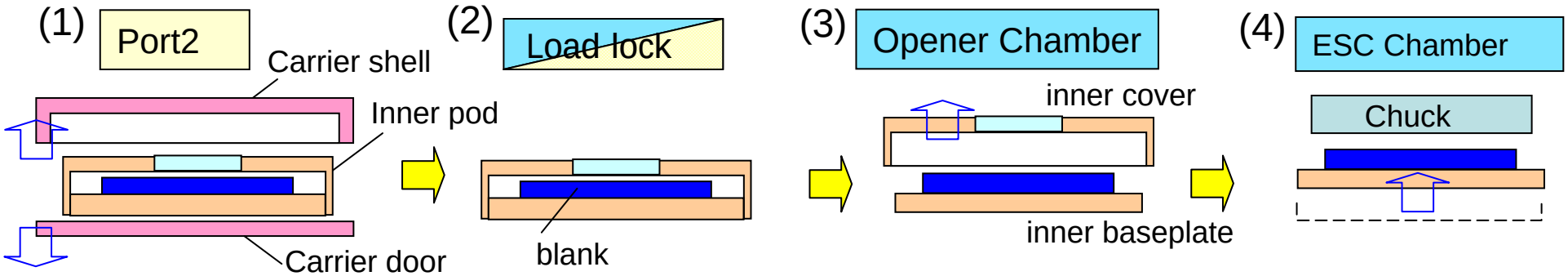

<u>Taking out an inner pod from a carrier</u> | <u>Evacuation</u> | <u>Opening an inner cover</u> | <u>Chucking</u>

Air flow in an inner pod during purging

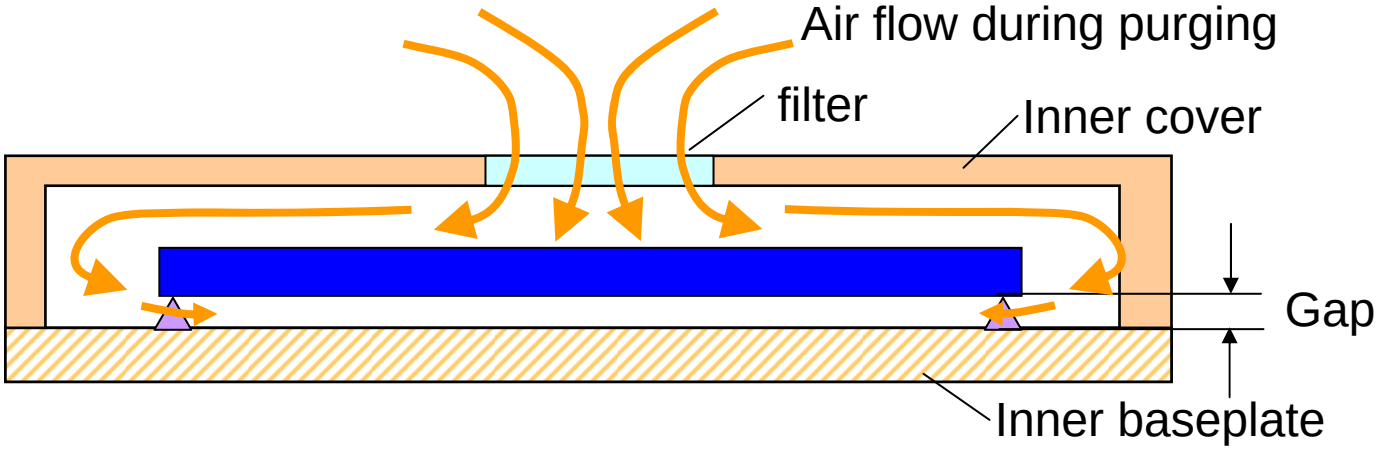

Two functions of an inner pod to protect a mask from particles

1. Air come into an Inner pod through a filter.

   Cleanliness of an environment in an Inner pod is considered to be independent on that of the outside. We studied the dependence in the experiment 4-4.

2. Air flow on the front side through the small gap between the inner baseplate and the blank.

   Particles adhered near the edge of the front side of the blank and the pattern area of a mask can be protected from particles.

4-1. Particle adders in Air & L/L

Purpose

We examined the particle adders for dual pods in each step.

Experiment Condition

1. Transfer path
   a. Full path (Port2 ⇔ L/L ⇔ Opener ⇔ ESC chamber)
   b. Path in air (Port2 ⇔ L/L chamber)
   c. Path in air & L/L chamber (Port2 ⇔ L/L chamber)
2. Common experimental condition
   a. Carrier Dual Pod
   b. Purge gas Dry air through a filter
   c. Mask blanks Quartz 152x152mm

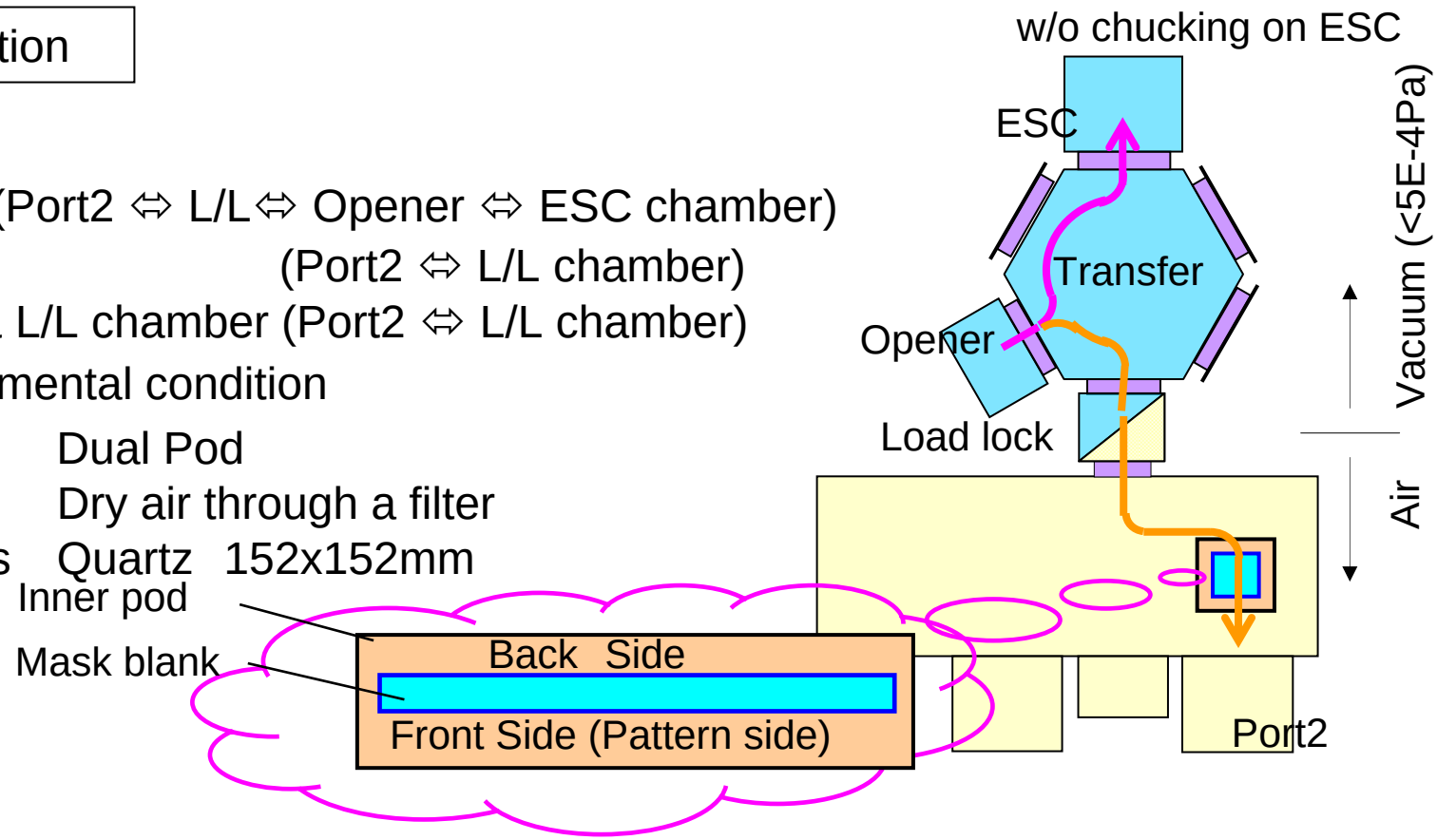

Experimental Results 1

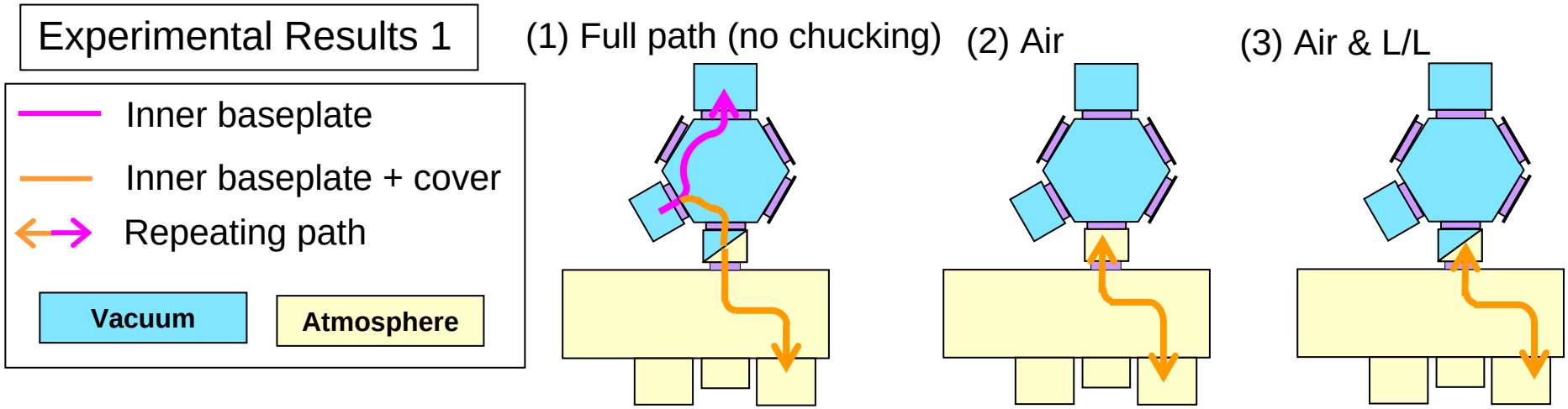

		(1) Full Path		(2) Air	(3) Air & L/L	
POD #1	Handling cycle	100	50	980	100	266
	Front side	3 (Map1-1)	1	1 (Map1-2)	1 (Map1-3)	0
	Back side	13	17	0	2	0
POD #2	Handling cycle	250	100	300	200	100
	Front side	3 (Map1-4)	0	1 (Map1-5)	2 (Map1-6)	0
	Back side	5	2	0	4	0

Particles >46 nm PSL, Inspection area:142x142 mm

Table1. The figures show the number of particle adders for each path. The number of the map in brackets show the number of the adders maps on the next page.

Experimental Results 2

Front Side View

	Full Path	Air	Air & L/L
POD #1	Map1-1 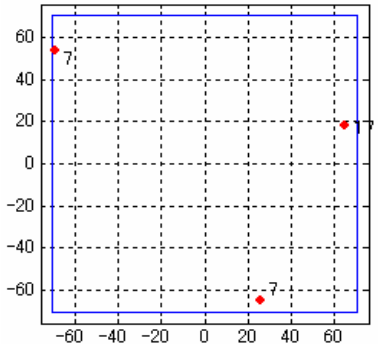 (100 cycles)	Map1-2 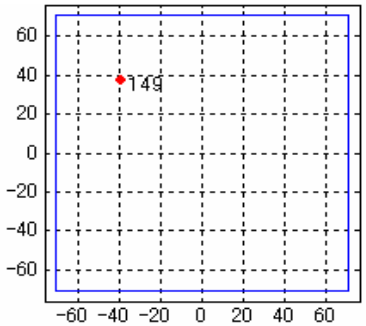 (980 cycles)	Map1-3 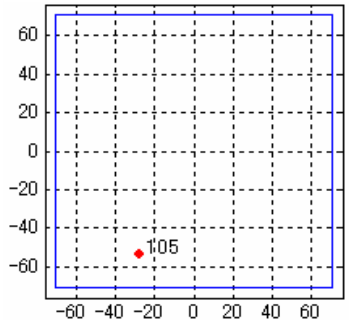 (100 cycles)
POD #2	Map1-4 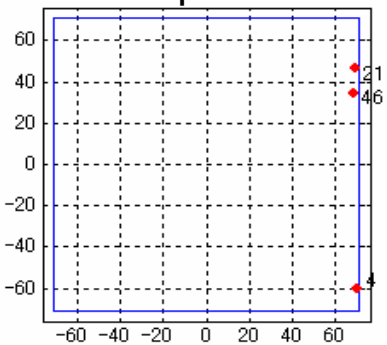 (250 cycles)	Map1-5 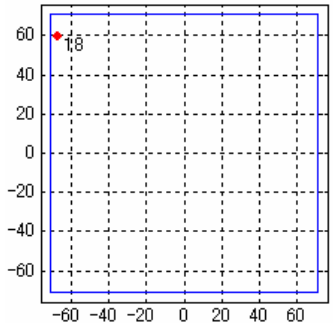 (300 cycles)	Map1-6 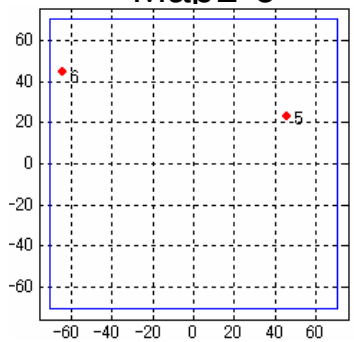 (200 cycles)

Map1. Red dots show particle positions. Figures on the side of dots show pixel counts corresponding with the particle sizes. 4 pixel counts corresponds to 46nm PSL. The black and blue frames show a mask and an inspection area respectively.

Experimental Results 3

	Full Path	Air	Air & L/L
Dual Pod (08/2007)	**0.014 (particles/cycle)**	**<0.01**	**<0.01**
Naked (04/2007)	**0.23**	**0.02**	**0.16**
Naked (10/2007)	**0.03**	**-**	**<0.01**

Standard RSP200 = Naked Blank

Particles >46 nm PSL, Inspection area is 142x142 mm

Table2. This table shows particle adders per cycle on the front side. The dates in brackets indicate measurement date (month/year).

We confirmed the number of particle adders over the path from a load port in air to the ESC chamber in vacuum could be minimized to around 0.01 particles/cycle (>=46nmPSL). We observed the load lock chamber had become clean up after long-term use.

4. Transfer Experiments

4-2. Particle adders in vacuum path

Purpose

We examined particle adders in vacuum path. This path with a dual pod includes a step of opening and closing of an Inner pod. This step is not included in the path with an RSP Pod and it is an inherent step for a dual Pod.

Experimental Condition

1. Path :
   a. Full vacuum path :
      Port ⇔ (L/L ⇔ Opener (**Open/Close**) ⇔Transfer-ESC)$_{x200}$
   b. Opener path :
      Port ⇔ L/L ⇔(Transfer ⇔ Opener(**Open/Close**))$_{x1000\ or\ 500}$
2. Pressure : <5E-4Pa
3. Pod : Dual Pod, RSP200

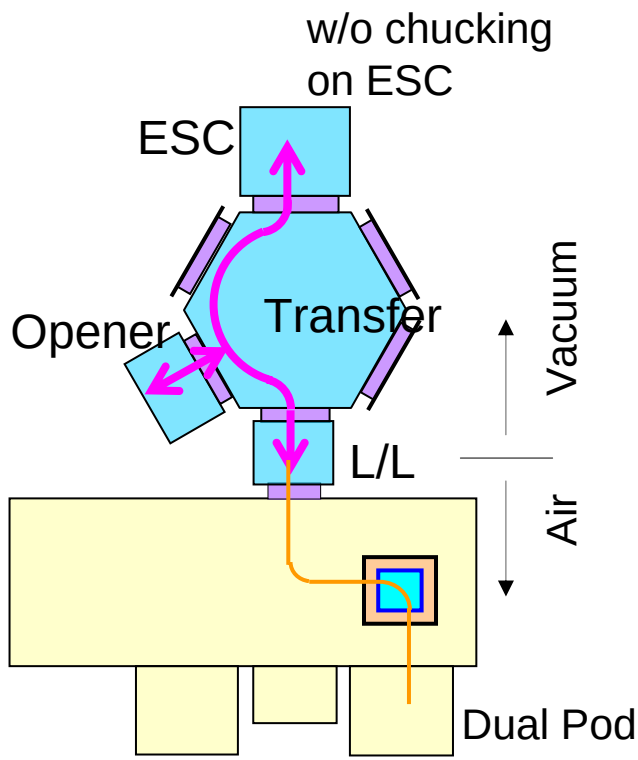

Experimental Results

- Inner baseplate
- Inner cover + baseplate
- Naked Blank
- Repeating path

Standard RSP200 = Naked Blank

(1) Full vacuum path

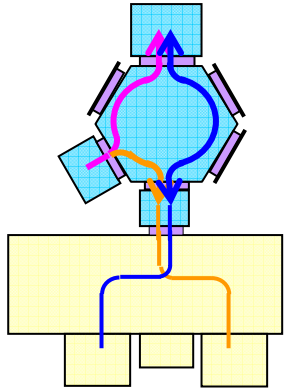

(2) Opener path

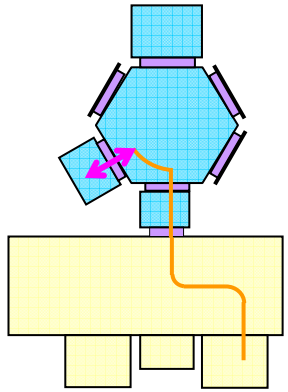

Vacuum

Atmosphere

		(1) Full vacuum path	(2) Opener path (opening & closing of an inner pod)	
	Handling Cycle	**200**	**1000**	**500**
Dual Pod	Front side	**0 (particles/cycle)**	**0.003**	**0.002**
	Back side	**0.045**	**0.01**	**0.022**
Naked	Front side	**0.015**		
	Back side	**0.03**		

Particles >46 nm PSL, Inspection area:142x142 mm

Table3. The figures show the number of particles adders per cycle for each path.

The opener path in vacuum is an inherent path for a dual pod. But the number of particles on the front side in this path is much less than 0.01 (particles/cycle).

4. Transfer Experiments

4-3. Distribution of all particles adhered in all experiments

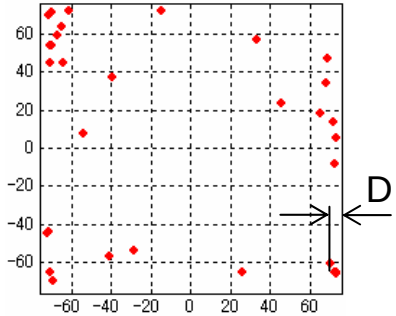

Fig1a. Adders Map (Front side view)

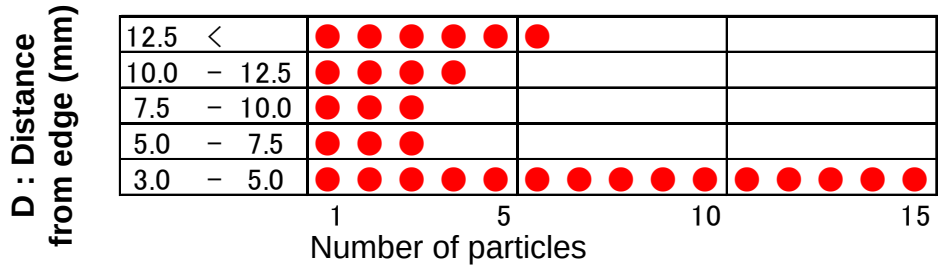

Fig1b. Histogram (Front side)

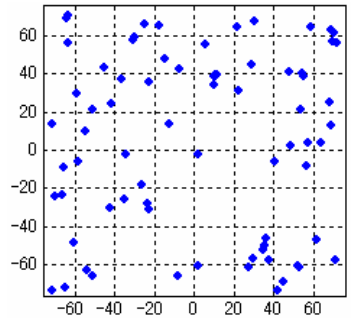

Fig2a. Adders Map (Back side view)

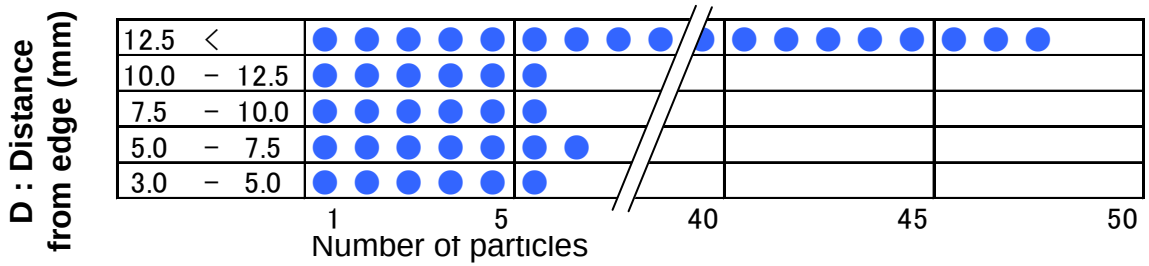

Fig2b. Histogram (Back side)

Fig1a shows a map that all particles for two experiments (table1 and table3) on the front side with dual pods are plotted. Inspection area is 146x146mm. Fig2a shows a map on the back side. Fig1b shows a histogram of particles (>46nm PSL). The vertical axis shows a distance from each edge of a blank to each particle. Fig2b shows the histogram on the back side.

We can see a clear difference in the particle distributions between on the front side and on the back side. Most particle adders on the front side are observed near the edges. This means particles easily stop near the edges even if particles come into the gap between the front side and the baseplate in the figure on the page 8.

4-4. Dependence of particle adders on outside cleanliness

Purpose

We examined particle adders during pumping down and purging varying cleanliness of the outside of an Inner pod. To change the cleanliness of the outside we repeated pumping down and purging the ESC chamber. The ESC chamber have not been pumped down and purged not more than 10 times before this experiment.

Experimental Condition

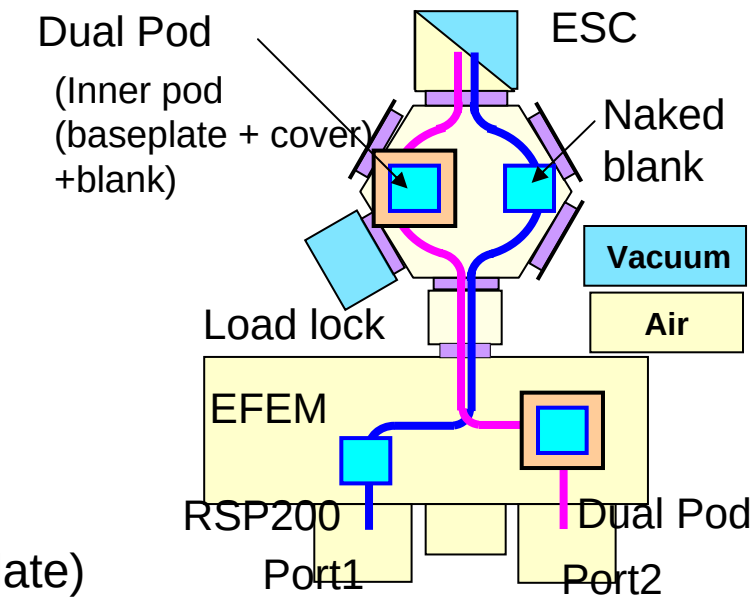

1. Path : Port ⇔ EFEM ⇔ L/L ⇔ Transfer
   ⇔ { ESC (pumping down & purging) } x 10 ~ 200 cycles
2. Pressure (ESC) :1E5Pa ⇄ 5Pa
3. Purging gas : Dry Air (without any filter)
4. Pod : Naked blank (RSP200 Pod),
   Dual Pod (A blank in an inner cover and baseplate)
5. Pumping down and purging
   We transferred either a naked blank or an inner pod to the ESC chamber.
   We repeated pumping down and purging several times (10 – 200).

Experimental Result

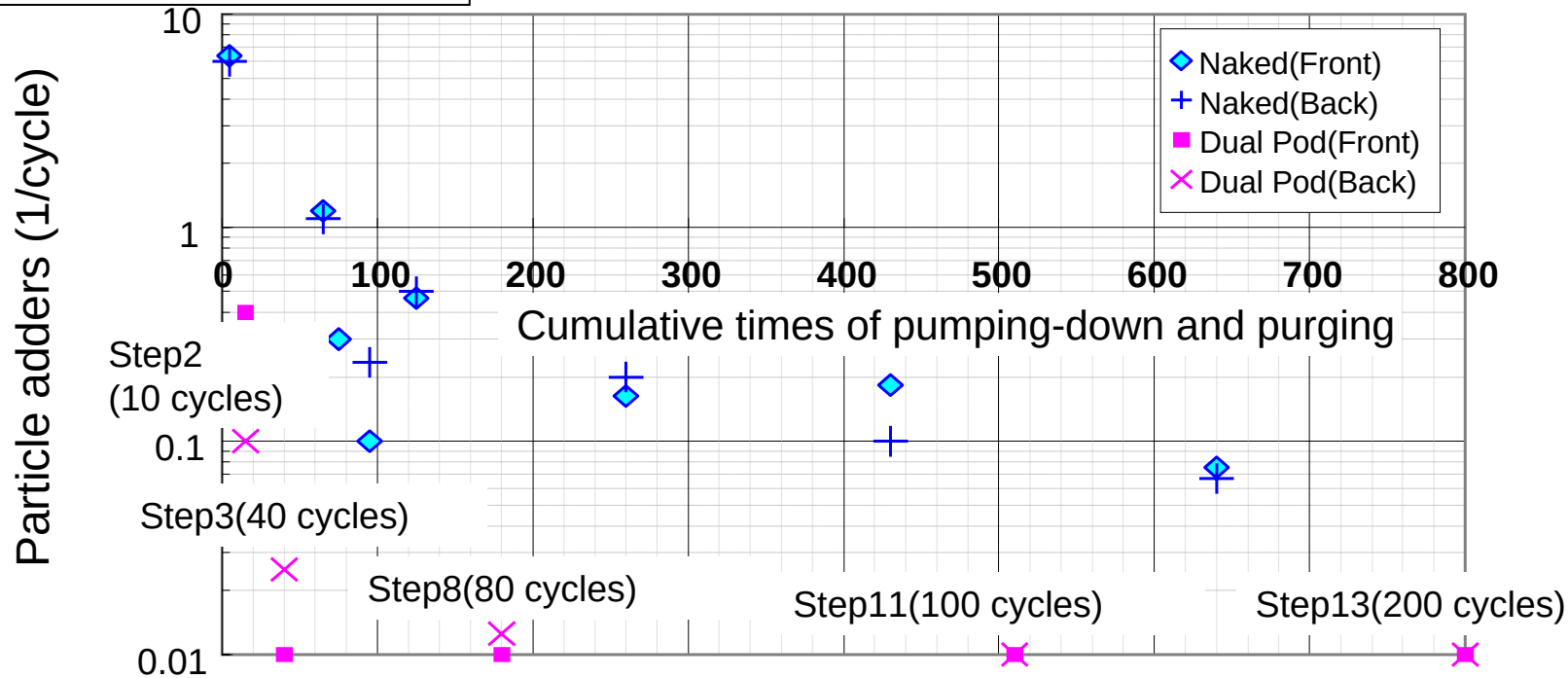

The horizontal axis shows the cumulative times of pumping-down and purging. We had not pumped down and purged this chamber more than 10 times before this experiment. The vertical axis shows the number of particles (>=46nm PSL) per cycle. The number in brackets shows the times of pumping-down and purging for each step. Particle adders per cycle plotted as 0.01 mean zero particles.

We confirmed particle adders on a blank in an Inner pod are not influenced by cleanliness in outside environment.

Summary

1. We confirmed a dual pod had high performance to protect a mask from particles. We consider the number of particle adders over the path from a load port in air to an ESC in vacuum can be made to be less or equal to 0.01 particles/cycle (>=46nmPSL).

2. A dual pod needs an inherent step of opening and closing an inner cover in vacuum. We confirmed the number of particle adders in this step was much less than 0.01 particles/cycle.

3. We confirmed the following two functions of an inner pod worked effectively.
   a. Particle adders on a blank in an inner pod are not influenced by cleanliness in outside environment and the inside environment of an inner pod is independent of that of the outside.
   b. Most particles stopped near the edge of a blank and did not come into the center of the mask because the gap between the inner baseplate and the front side of the mask is small.

Acknowledgement

1. This work is supported by NEDO as part of the EUV mask program.

2. We appreciate Entegris staff for providing, designing and manufacturing dual pods.

3. We appreciate the effort of Rorze staff in designing and manufacturing the MPE Tool.

4. We would like to thank Dr. Yoshio Gomei in Canon for valuable and comments and discussions.