Progress and Challenge in Achieving Defect-Free EUV Reticle Handling

International EUVL Symposium, Sapporo, JP
October 29, 2007

Long He[1a], Phil Seidel[2], Stefan Wurm[2], Ernie Betancourt[1], and Jon Underwood[1]

[1] SEMATECH, 255 Fuller Road, Albany, NY 12203
[2] SEMAETCH, 2706 Montopolis Drive, Austin, TX 78741
[a] long.he@sematech.org

SEMATECH

Accelerating the next technology revolution.

Advanced Materials Research Center, AMRC, International SEMATECH Manufacturing Initiative, and ISMI are servicemarks of SEMATECH, Inc. SEMATECH, the SEMATECH logo, Advanced Technology Development Facility, ATDF, and the ATDF logo are registered servicemarks of SEMATECH, Inc. All other servicemarks and trademarks are the property of their respective owners.

Outline

- EUV reticle handling standardization
  - SEMI 4466 Blue Ballot
  - Current activity and Yellow Ballot
- Reticle handling infrastructure at SEMATECH
  - Carrier and others
- SEMATECH initial results from SEMI-4466 compliant carrier
- Summary

SEMI EUV Reticle Handling Standardization

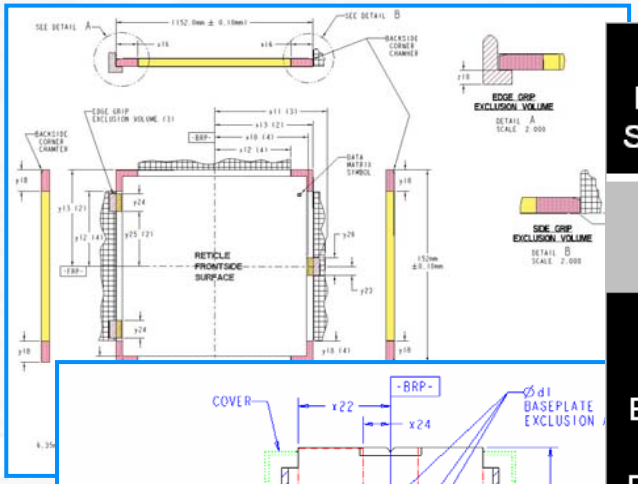

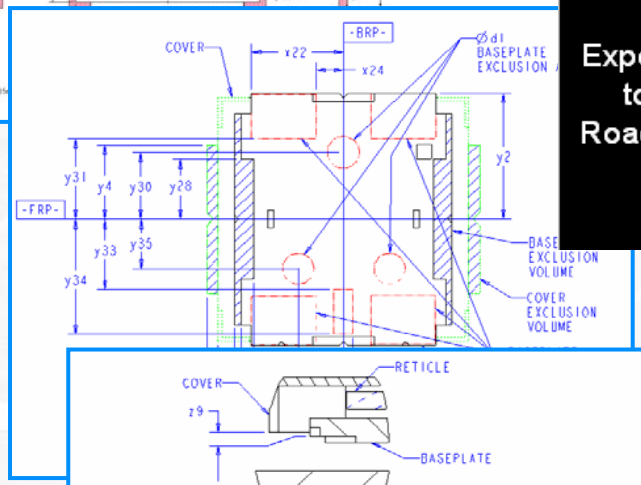

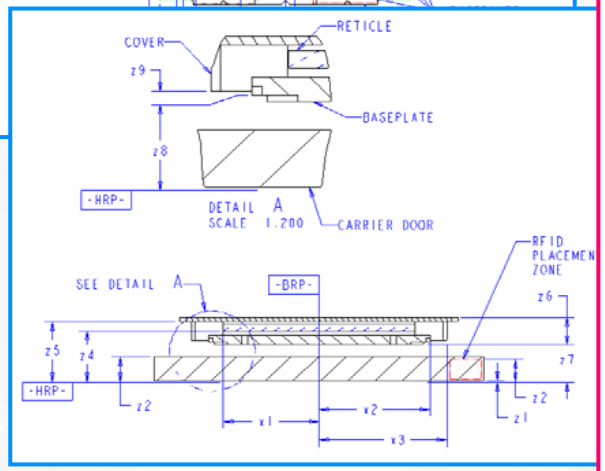

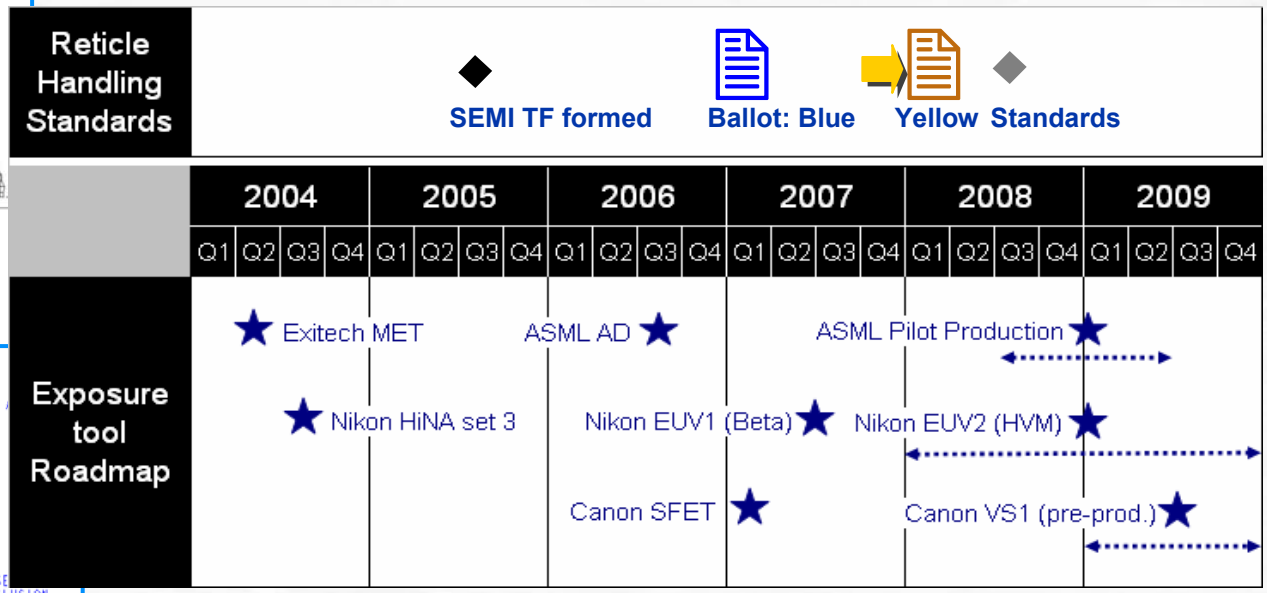

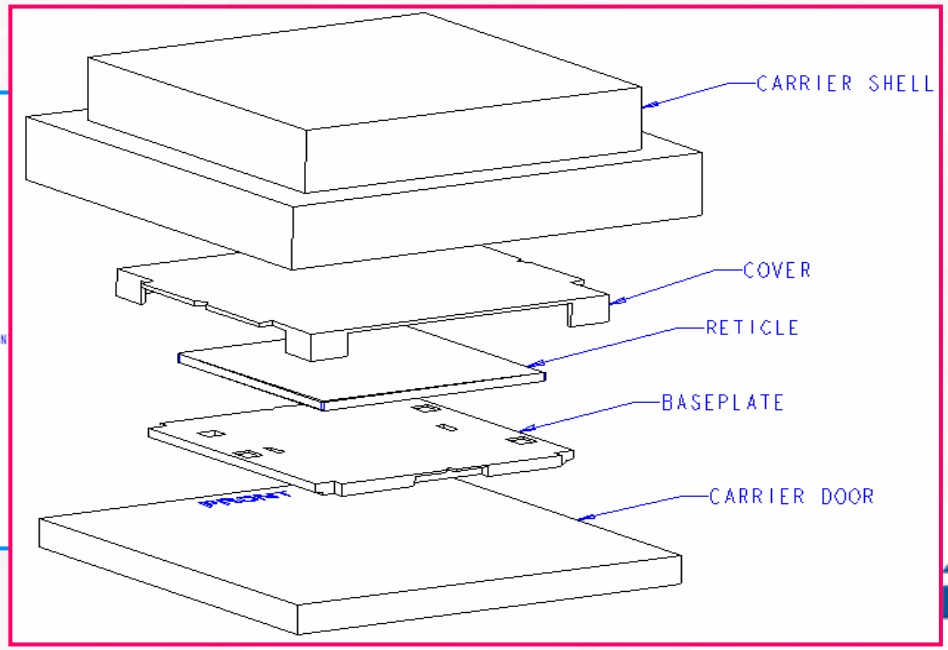

Dual Pod (DP)

He, *et al.* (RP-01)

EMATECH
Accelerating the next technology revolution.

EUV Reticle Handling Blue Ballot SEMI 4466

- **The *global* SEMI Task Force is chartered under the NA PIC committee.**
  - Includes 23 global representative stakeholders (NA, EU, JP, KR)
- **SEMI 4466 Blue Ballot in June 2007**
  - Over 50 inputs/comments received from 31 respondents
  - The draft standard is being improved, thanks to the Blue Ballot process.
- **The key technical elements include**
  - Contact area: Reticle exclusion area and reticle handling exclusion volume
  - Inner pod: Base plate, cover, interface
  - Outer pod: 200 mm SMIF pod interface standard
  - Loadport: 200 mm SMIF loadport standard with enhanced specifications
  - Mask placement/stack-up error specifications

Current Activities and Next Steps of Reticle Handling Standardization

- **Current activities**
  - Over 35 patents deemed *related*. Two among those have been determined *material* by the TF.
    - Reporting *material* patents to NA PIC meeting, held now at San Diego, to direct SEMI for disposition.
  - On-going core TF work group meetings to consolidate the feedback (TF co-chairs and exposure tool suppliers)
- **Next steps**
  - **Voting, global Yellow Ballot of SEMI 4466 is targeted to submit in Q1 2008**
    - With much improved prognosis through the ballot process

SEMI 4466 Needs Continuous Improvement: A Specific Example

- The problem: Particle or mechanical failure
- The cause: The pooled stack-up & robotic error spec is greater than mask placement tolerance.
  - But allowed by current Blue Ballot and existing SEMI 200 mm SMIF pod and load-port standards.
- The fix: Self-aligning KC pin & other areas

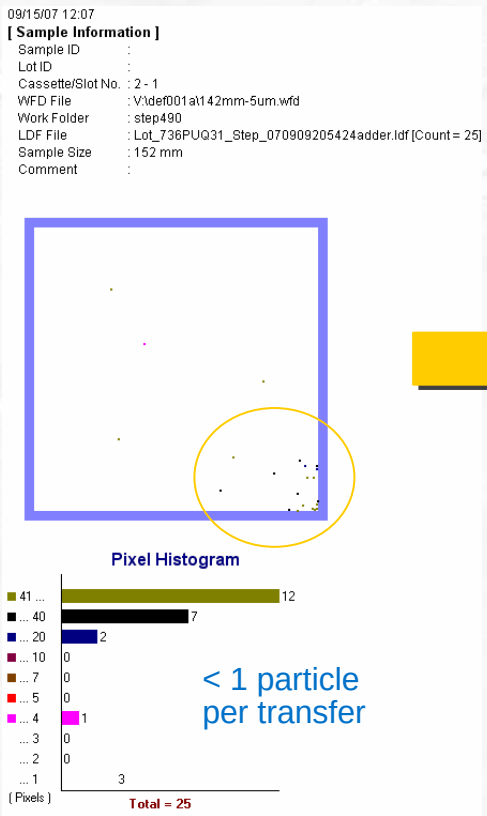

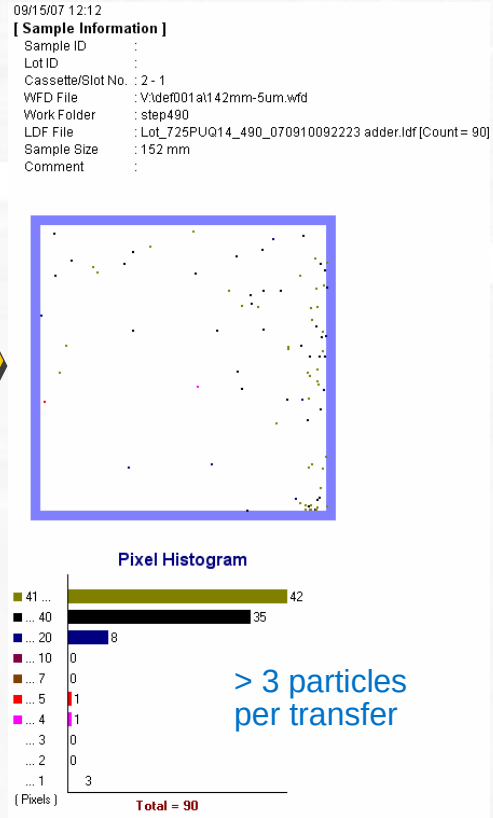

Starts bad

Gets worse…

He, *et al.* (RP-01)

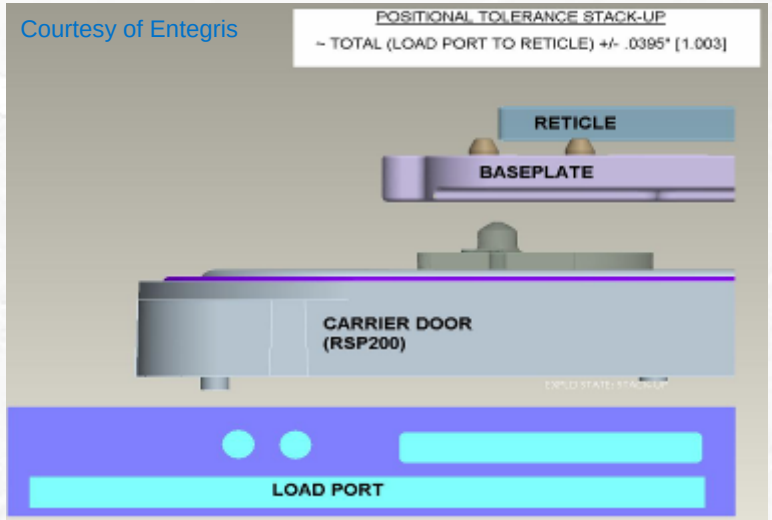

Stack-up error

Scotch tape: A bandage

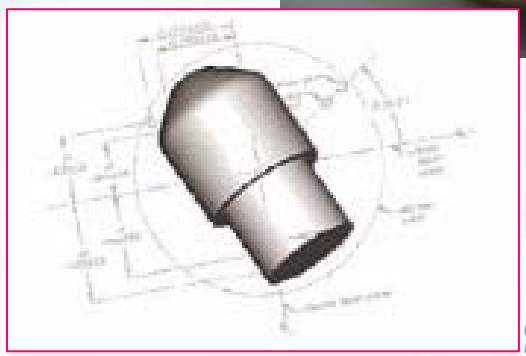

KC pin: To reduce the issue

SEMATECH
Accelerating the next technology revolution.

Summary of SEMI EUV Reticle Handling Standardization

- **The standard is about the required mechanical interfaces of EUV reticle handling.**
  - It is based on dual pod (DP) carrier approach.
  - It leverages current mask infrastructure (200mm SMIF pod / loadport interface standards).
  - It is needed for EUV reticle transfer, transport, in-tool handling, shipping, and storage.
    - You own your implementation strategy
    - But, concepts to be discussed
- **<u>Study</u> the technical specifications and let us know your feedback!**
- **Vote YES! on SEMI 4466 Yellow Ballot, in Q1 2008.**
  - Like any standard, it is NOT going to be perfect. But, the industry needs to start from somewhere now!

sPod: A Dual Pod Carrier Built to SEMATECH Requirement / Specification

- **SEMI 4466 ballot standard-compliant!**
- **Delivered in September 2007**
  - **Initial test results to be discussed**

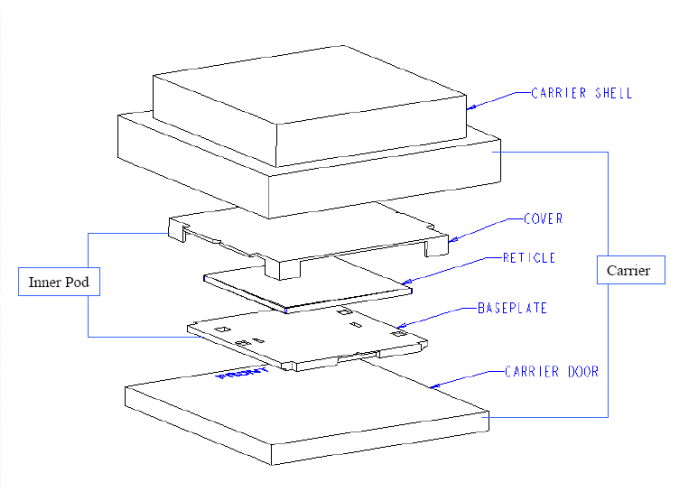

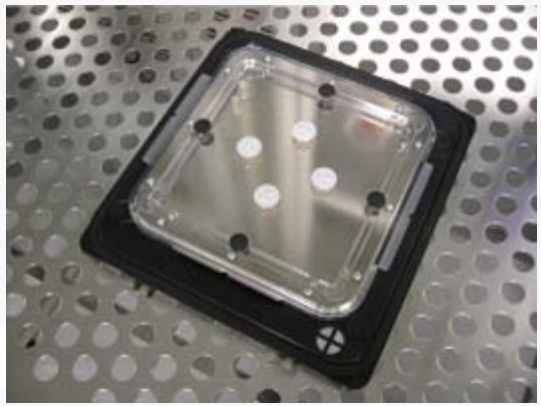

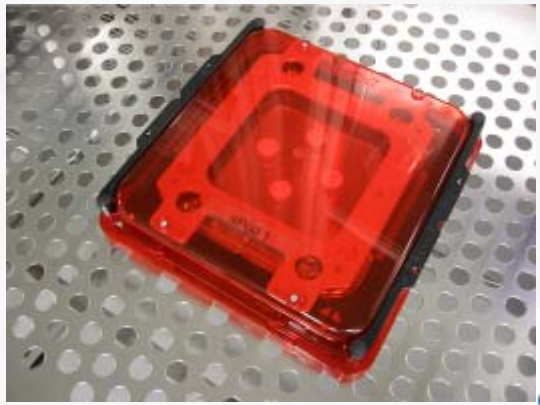

Automated DP Cleaner: An EUV Mask Infrastructure @SEMATECH

- **Necessary for inner pod cleaning**
- **The outer pod can be cleaned as you do today for the RSP200 SMIF pod.**

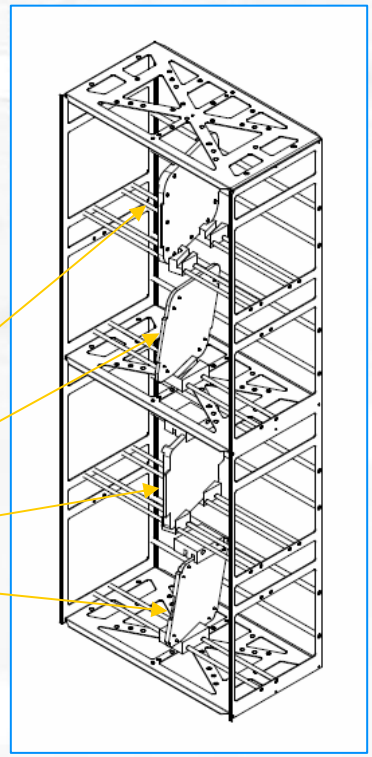

EUV Reticle Sorter: An EUV Mask Infrastructure @SEMATECH

- **It integrates EUVL-specific mask tools to existing optical mask tools.**
  - **EUV reticle carrier ⟺ Optical reticle carrier**
- **Now, it's a R&D tool. But similar tools will be needed as a key mask infrastructure for production.**

Loadport A:

- **RSP200**
- **sPod / DP**
- **EUV Carrier X**
- **EUV Carrier Y**

Between any two

Loadport B:

- **RSP200**
- **sPod / DP**
- **EUV Carrier X**
- **EUV Carrier Y**

For Shipping, Cardboard Packaging May be Sufficient

- sPod can be packed in cardboard boxes and shipped like household packages by commercial package shippers, such as FedEx, etc…
- Mask orientation may not significantly matter, but more study needed.

sPod packed in cardboard boxes

Waiting for shipper to pick up

Concepts to Implement an EUV Reticle Handling Solution

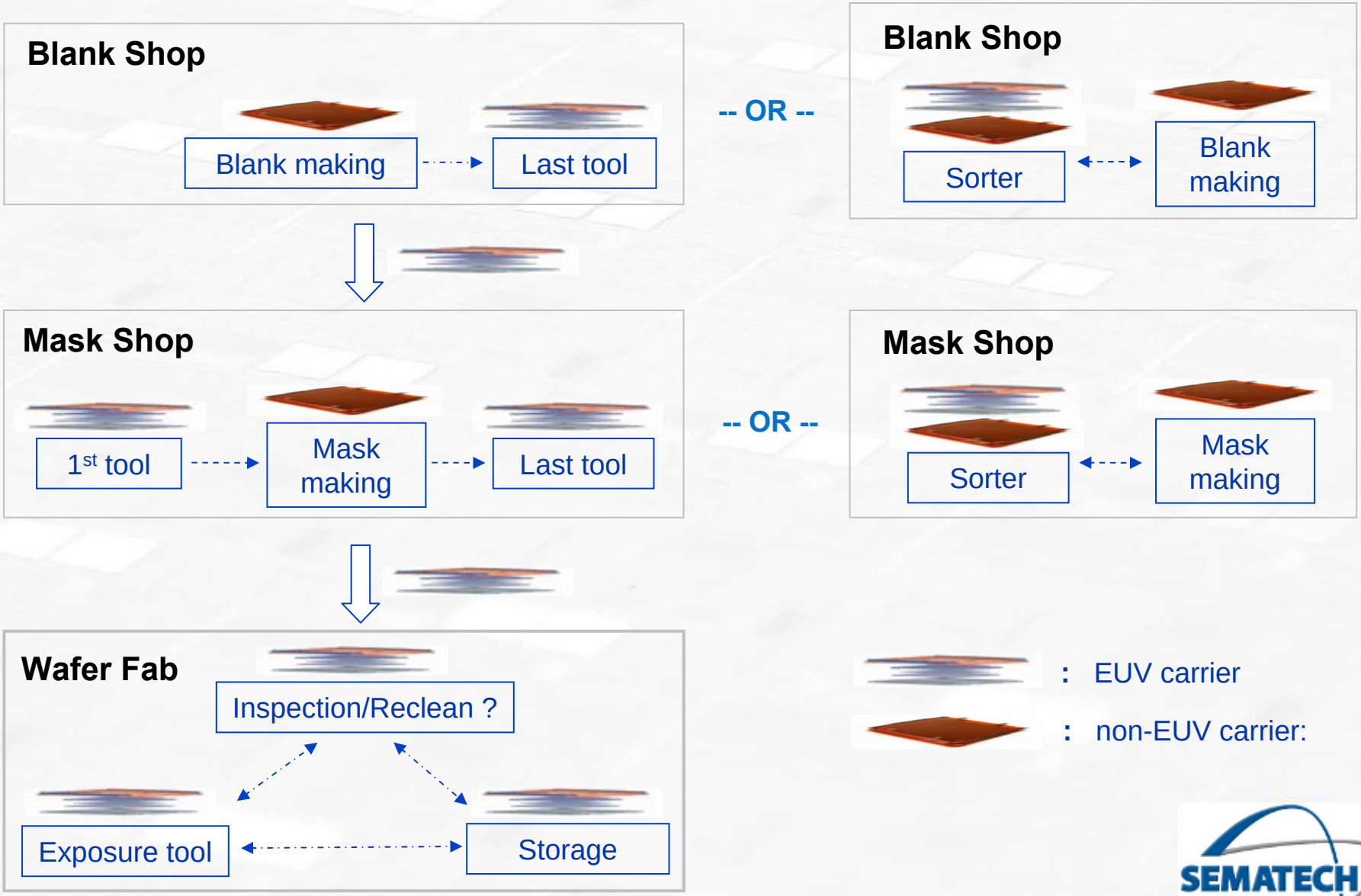

He, *et al.* (RP-01)

SEMATECH
Accelerating the next technology revolution.

Dual Pod Approach Demonstrates Low Total Particle Defects

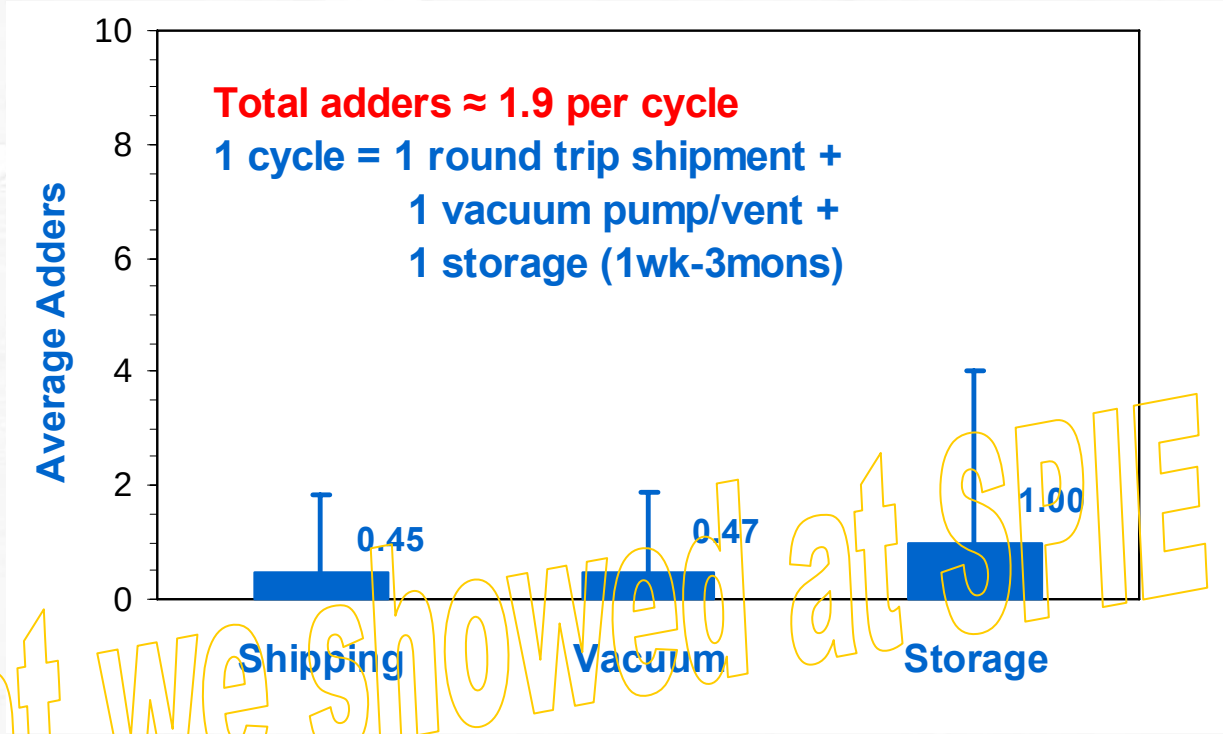

What we showed at SPIE 2007

- **Demonstrated ~2 particle defects per cycle**
  - To be further quantified with robotic handling
- **Need to validate at << 50 nm inspection sensitivities**
  - Investigate 30-50 nm particle protection capability for 32 nm HP requirement
  - Lasertec M7360 installed at SEMATECH
    (Kearney & Cho, *et al.* 6517-12)

sPod Carrier (DP) Can Be Handled *Cleanly* by Robots

- Automated reticle transfer between sPod (SEMI4466 ballot compliant carrier) and RSP200 SMIF pod, by DP200 EUV reticle sorter at SEMATECH
- Baseline of ~0.5 particles per 100 transfers (at ~50nm sensitivity)

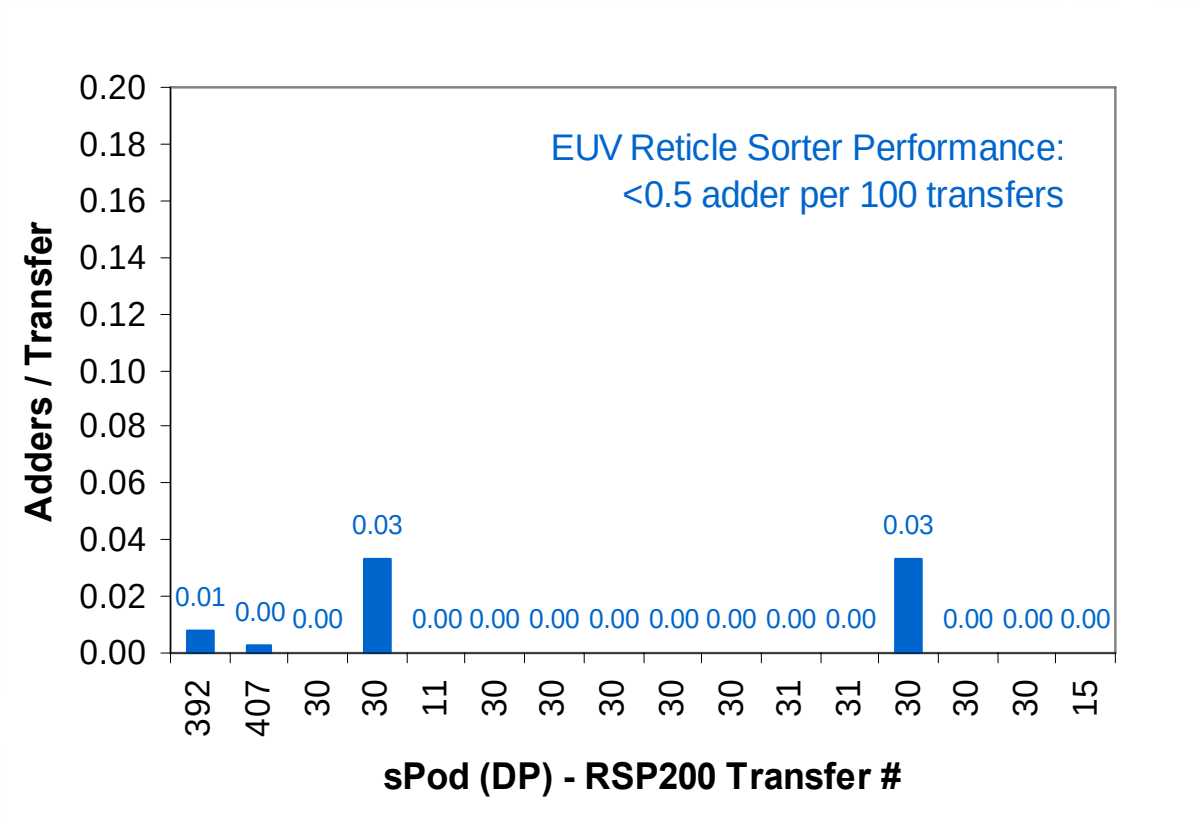

In-Tool / Vacuum Reticle Protection

- Defect control tool (DCT) at SEMATECH modified to study particulate protection by dual pod.
- Limited, fully automated tests show nearly particle-free vacuum protection, a much improved result over what's reported at SPIE 2007.
  - sPod in-tool protection tests will be followed once tool mechanical interface issue is resolved.

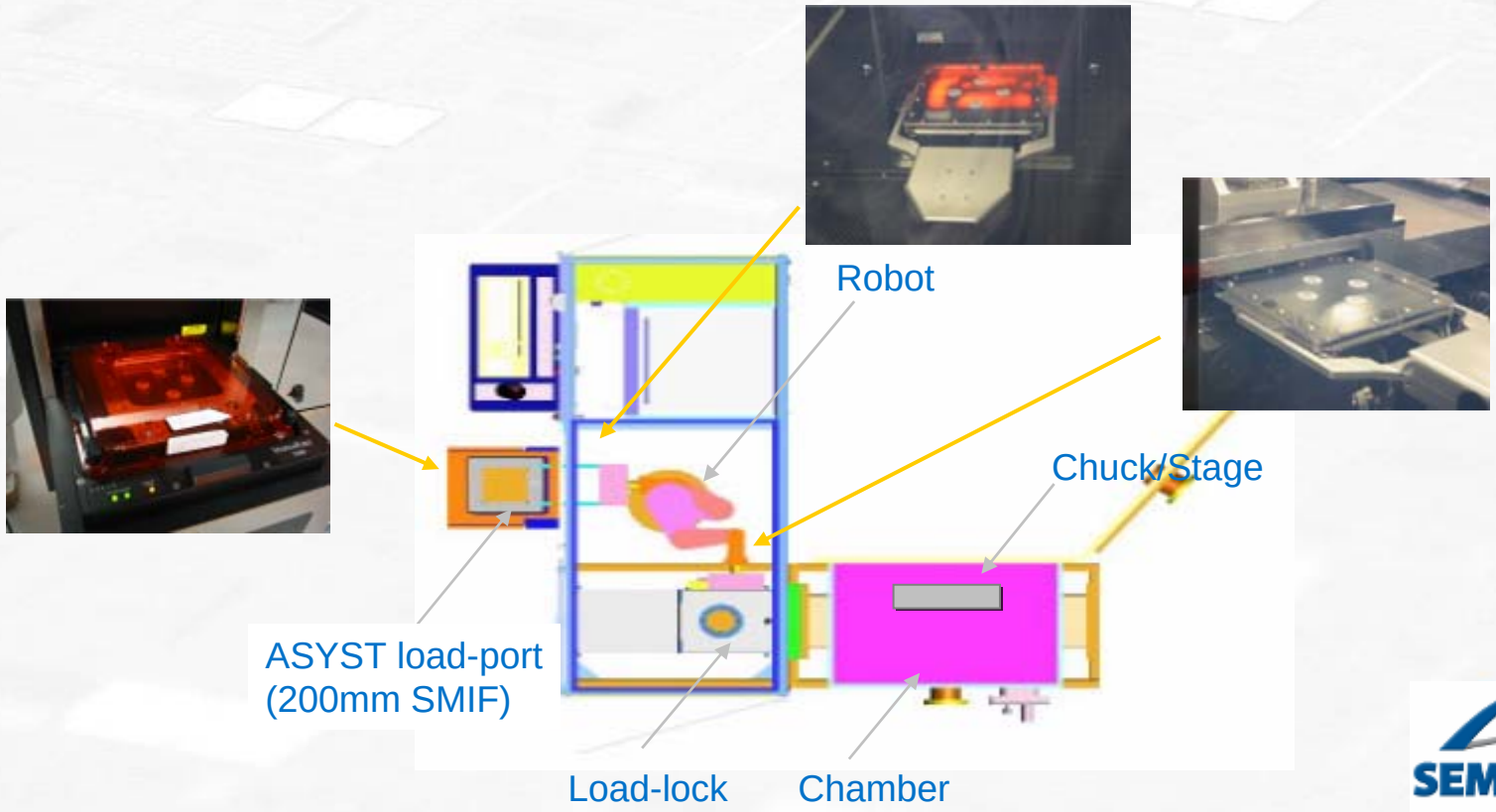

sPod Carrier (DP) May Ship Mask *Cleanly* at ~50 nm Inspection Capability

- Air shipped between Albany, NY, and Austin, TX
- Initial result averages at <0.3 particles/roundtrip air shipment

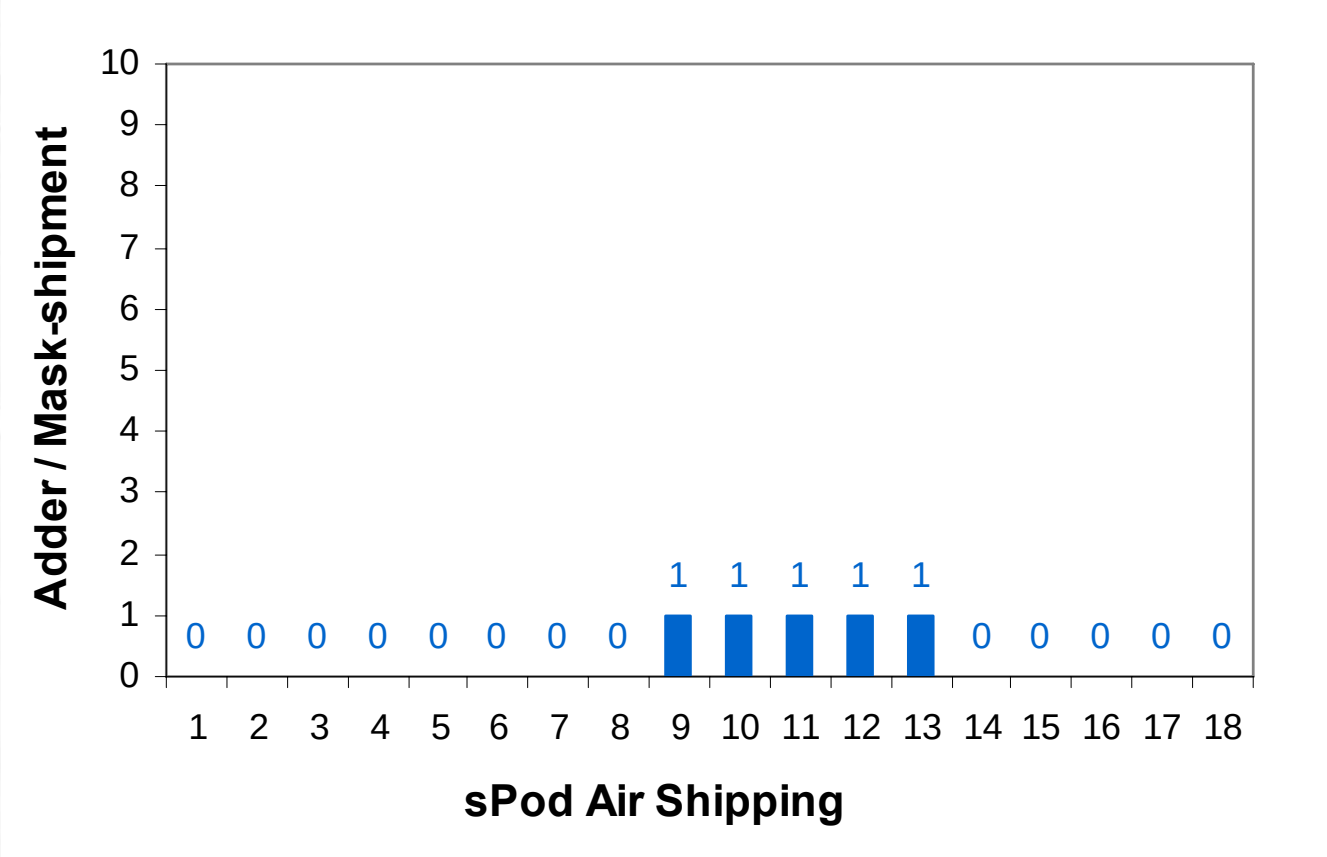

sPod (DP) May be Capable to Keep Mask *Clean* Over Time: Accelerated storage Test

- **No particulate contamination found after being exposed in office area for ~3 weeks <u>un-bagged.</u>**
- **A new, effective method for accelerated storage tests.**

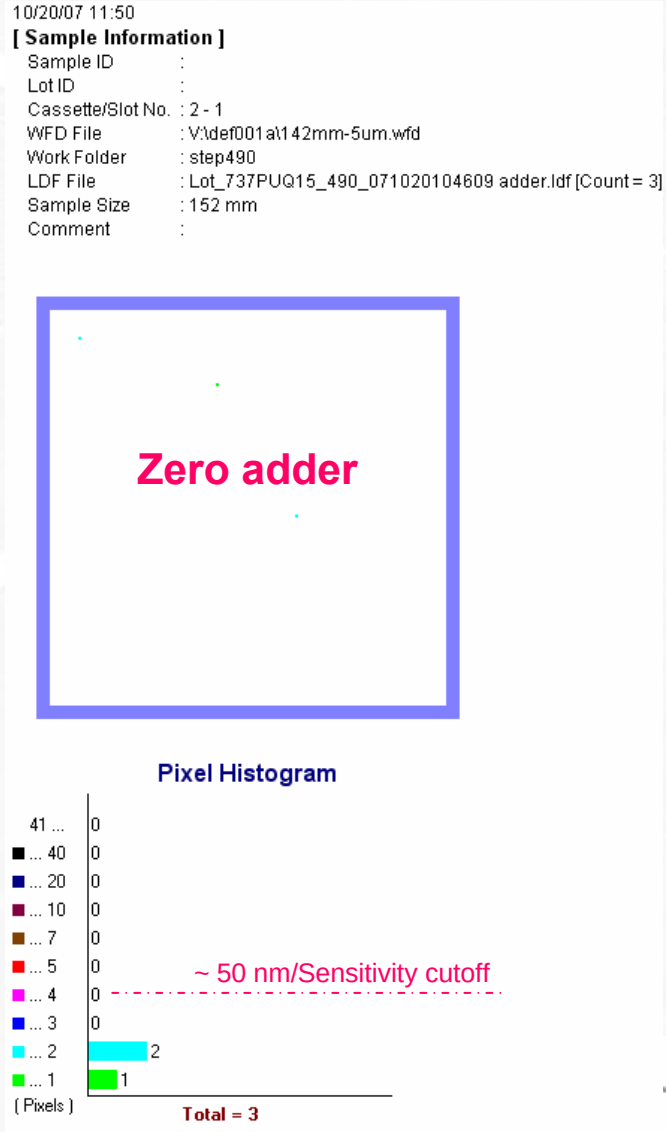

Summary

- **SEMATECH has established key EUV reticle handling infrastructures.**
  - Carrier, cleaner, sorter …
  - And unique test capabilities
- **sPod initial data is as good as state-of-the-art inspection tools can see.**
  - More tests will follow at current inspection capability.
    - But, << 50 nm inspection capability is required for more conclusive assessment.
- **The industry is making progress in EUV reticle handling standardization**
  - Blue Ballot is being improved by consolidating inputs.
  - Still, triple check the specifications.
  - Yellow Ballot is slated for Q1 2008.

Acknowledgements

Entegris, Inc
Lasertec, Inc
MBDC of SEMATECH
Canon, Inc
Nikon Corporation
Intel Corporation