Tools for EUV-Resist Characterization

Rainer Lebert, Christian Wies

AIXUV GmbH, Steinbachstrasse 15, D-52074 Aachen, Germany

AIXUV GmbH has designed a tool for grayscale resist exposures and installed the first system at Infineon in Erlangen, Germany in October 2002. This first system already was capable of printing 50 nm lines and spaces using contact stencil masks. Recently the tool was upgraded and a more powerfull version was installed in Korea. Improved stencil masks with more complex features like ellbows, contact holes, and free standing lines are also available now.

As resist outgassing behavior becomes more and more of interest, a third generation of the resist characterization station was designed. The new concept now includes a quadrupole mass spectrometer for residual gas analysis as well as witness plate measurements with on-line reflectometry for accelerated contamination quantification measurements. The design of the vacuum vessel is optimized for cleanliness and good limits of detection for the outgassing specimens of interest in the RGA. To get realistic results for the contamination measurements one design criterium was to achieve an EUV power level at the wafer that is comparable to the situation in the production tools.

AIXUV EUV-Technology

Task in Resist Characterization

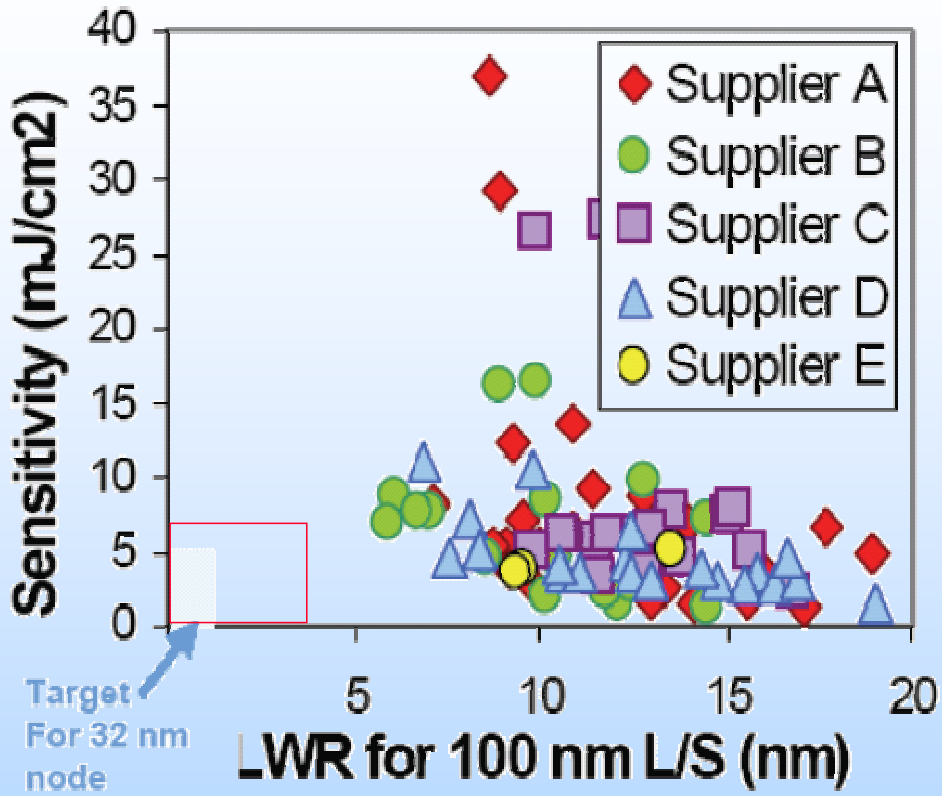

Adapted from Melissa Shell 5/10/05

Development of Photoresists, which support EUV-Lithography with « 10 mJ/cm² sensitivity for high throughput; sufficient resolution (contrast and stability) for « 32 nmis the most challenging task in developing EUVL production chain.

Mitigation of outgassing under EUV exposure of materials which may harm projection optics lifetime is special quality factor to be tested.

Accelerated progress is expected with supporting de-central, dedicated tools for data generation and learning.

AIXUV has proofed principles of realizing EUV exposing tools for a) Sensitivity determination, b) simple contact printing for generating narrow structures and c) schemes for investigating outgasing under EUV exposure. AIXUV has proposed concepts for laboratory tools which allow to test a combination of the demanded features. Core components have been tested in the past.The realization of prototype depends on input for top-level specifications to finalize a customer- or community specific solutions..

AIXUV GmbH
Steinbachstraße 15
52074 Aachen

EUV-Exposer: Dose-Contrast: Sensitivity

Exposer Features:

Gas-discharge EUV source

Zirconium window and multilayer reflection as spectral filter

20 fields of 5 mm diameter homogeneously exposed

In-line dose control

> 0.1 mJ / cm² / minute

AIXUV GmbH
Steinbachstraße 15
52074 Aachen

Results from Resist Exposer

Close-loop controlled Dose Contrast Exposures

With calibrated, feed-back dose control, contrast curves are obtained within less than 1 hour for 5 mJ/cm² resists.

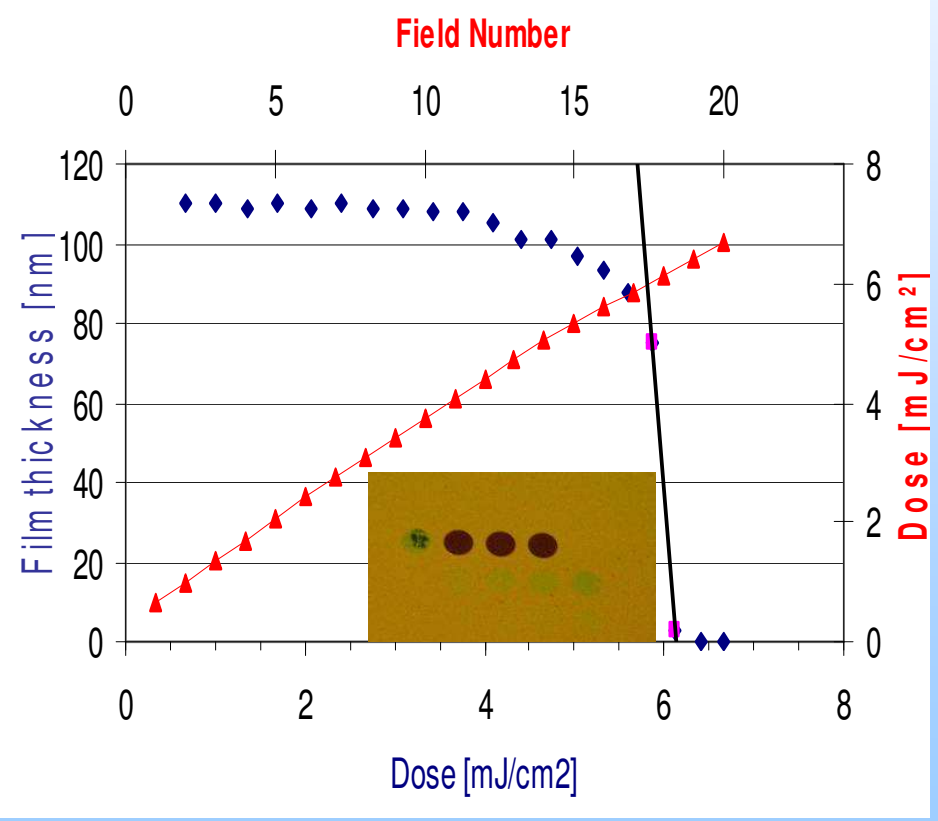

Contact Printing of 50 nm L/S

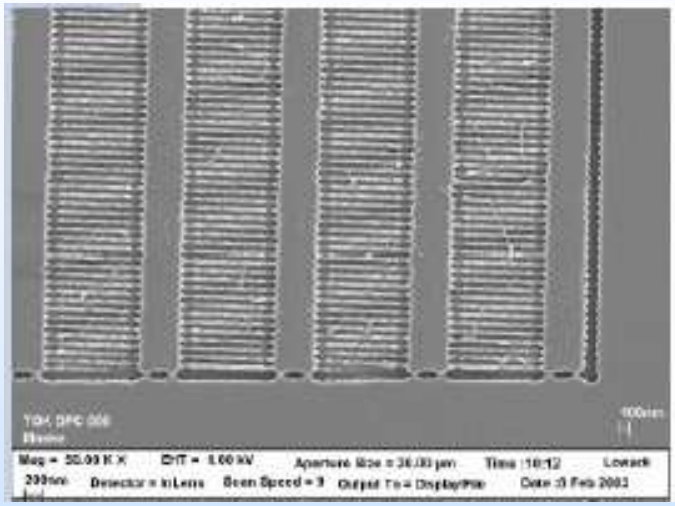

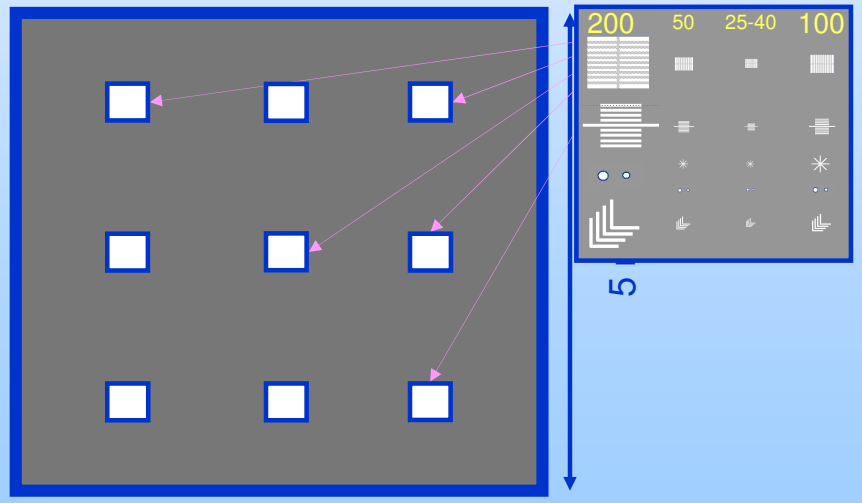

New Contact mask under fabrication (50 nm Al-absorbers in 50*50µm dyes for higher stability)

AIXUV GmbH
Steinbachstraße 15
52074 Aachen

Integrated Tool for EUV Photoresist: Design Specifications

Sensitivity Mode	Structure Mode	Outgasing Mode
Inband Exposures with > 0.2 mW/cm²	Interferometric Lithography	Inband Exposure in 4*4 mm dyes
49 Adressable Dyes of 4* 4 mm²	Dyes of 1* 1 mm²	RGA detection
Closed-Loop dose control		In-Line dose monitor

OPTION: Inline Reflectance Monitor for mirror contamination (ASML protocol)

Top Level Target	< 0.05 mJ/cm² dose accuracy 0.2 < D' /(mW/cm²) < 1	< 15 nm CD; High contrast Mechanical stability	> 10 (100) mW/cm² with high RGA sensitivity: Ultra-clean

AIXUV GmbH
Steinbachstraße 15
52074 Aachen

Realizing ASML Protocol with Laboratory Tool combined with Exposure

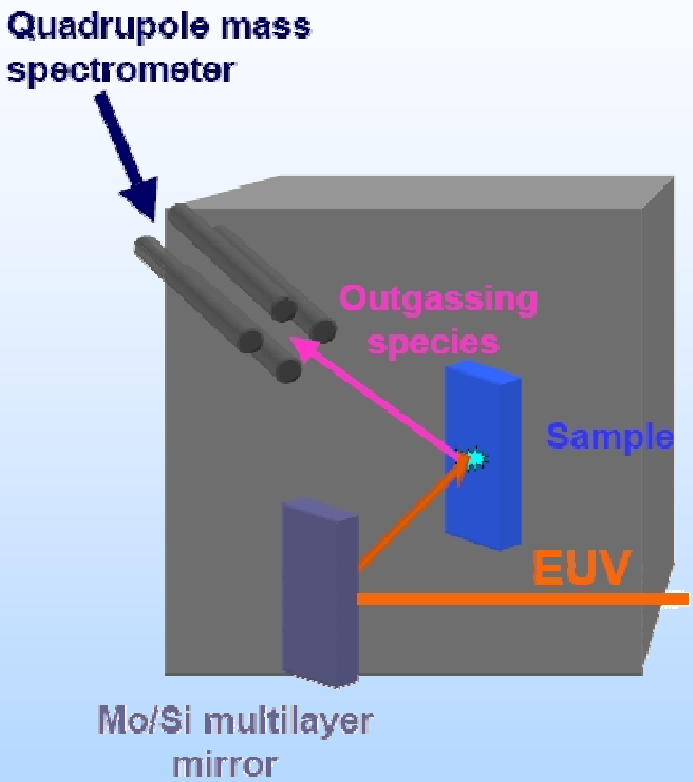

Main Concern with resist outgasing :

Contamination of PO-Box mirrors from radiation induced resist outgassing products.

Outgassing measurements so far:

- **Measure outgassing products and rates**
- **Model transport to mirrors**
- **Model contamination of mirror under irradiation**

Tool Design Targets:

- **Spectral distribution**
- **Scanner Like Intensity target: 100 mW/cm²**

ASML Suggestion

- **Measure contamination of mirror under irradiation of mirror AND photoresist with large transport efficiency (acellerated)**
- **Model transport situation in scanner !**

→ Acceletaaion factor

AIXUV GmbH
Steinbachstraße 15
52074 Aachen

Realizing ASML outgasing Protocol with Laboratory Tool
Tool Concept and Design

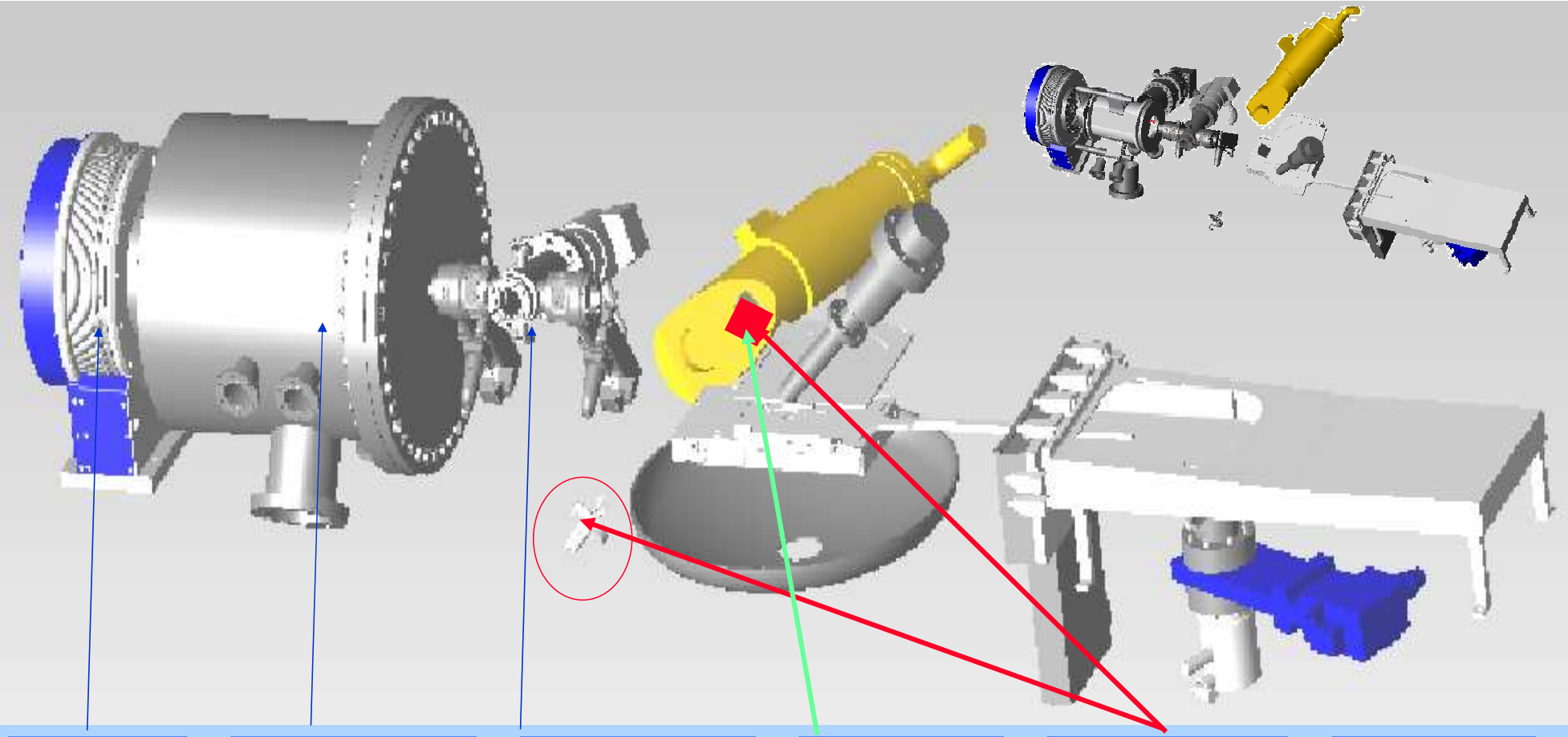

Emission of EUV-Source

Collected by ML-Schwarzschild

Through double SPF Windows differentially pumped

45 degree mirror close to wafer

Mirror reflectivity is measured IN-LINE

Wafer loaded through load-lock

AIXUV GmbH
Steinbachstraße 15
52074 Aachen

Components Study: Dual Channel EUV Inline reflectometry

Two channels of ML-filtered diodes

Are compared under EUV irradiation (broadband); one channel always open; second only for short measurement

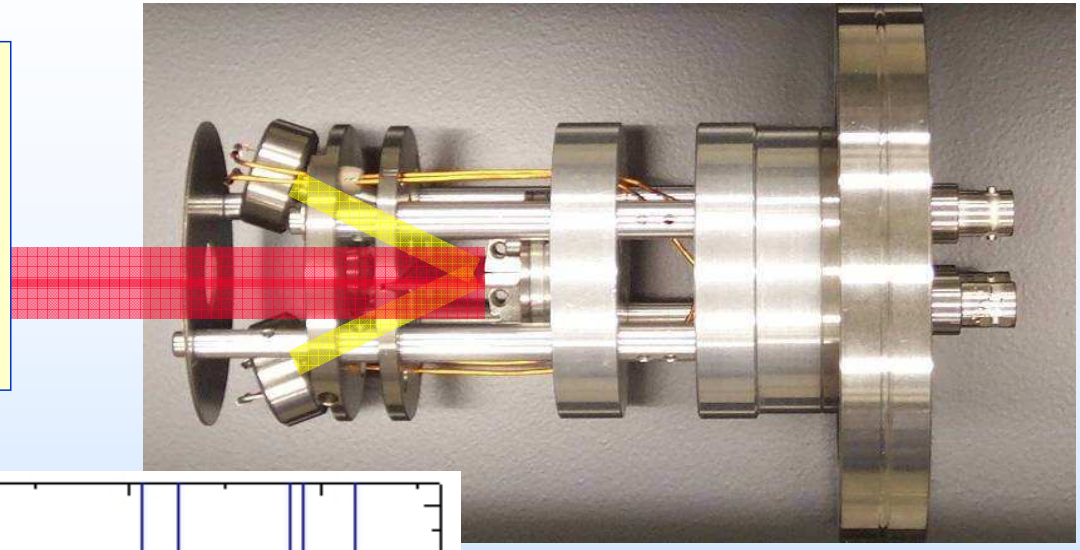

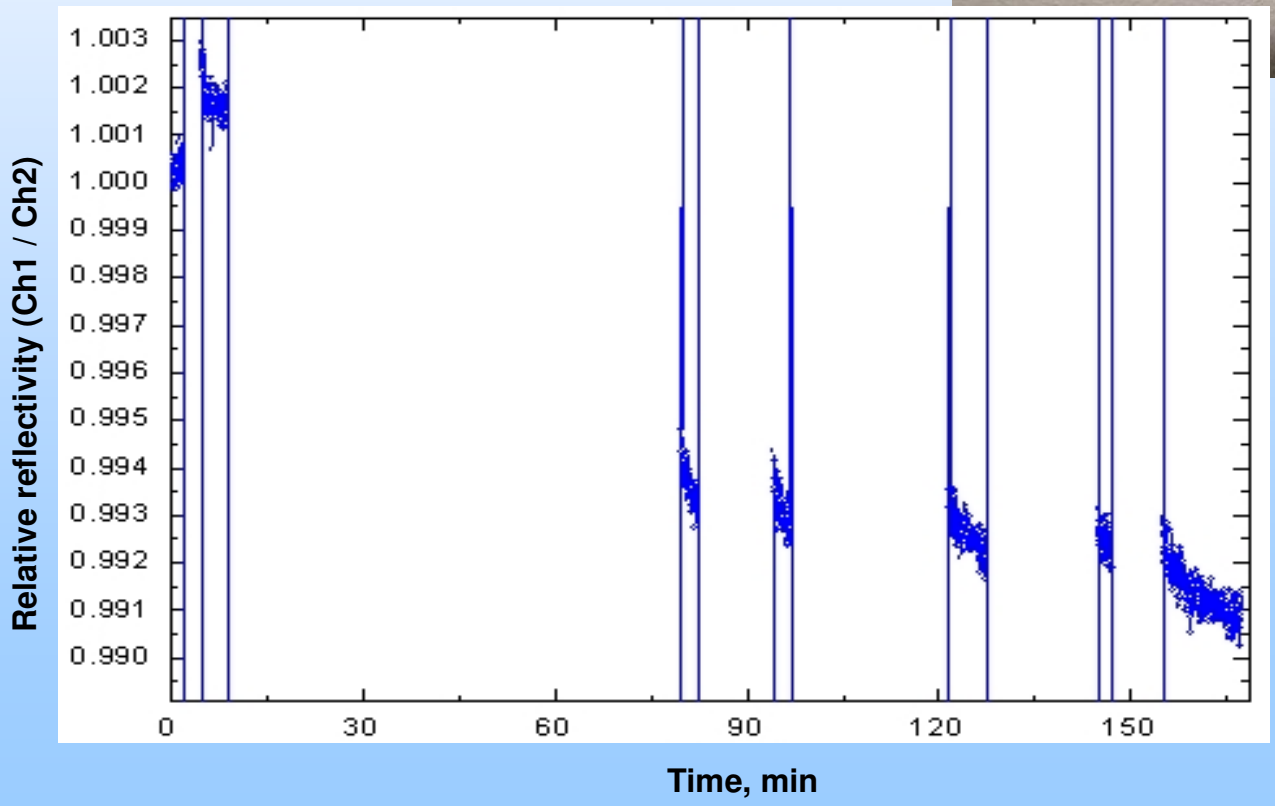

Sensitivity to change in reflectivity is better than 0.1 %

AIXUV GmbH
Steinbachstraße 15
52074 Aachen

Components Study

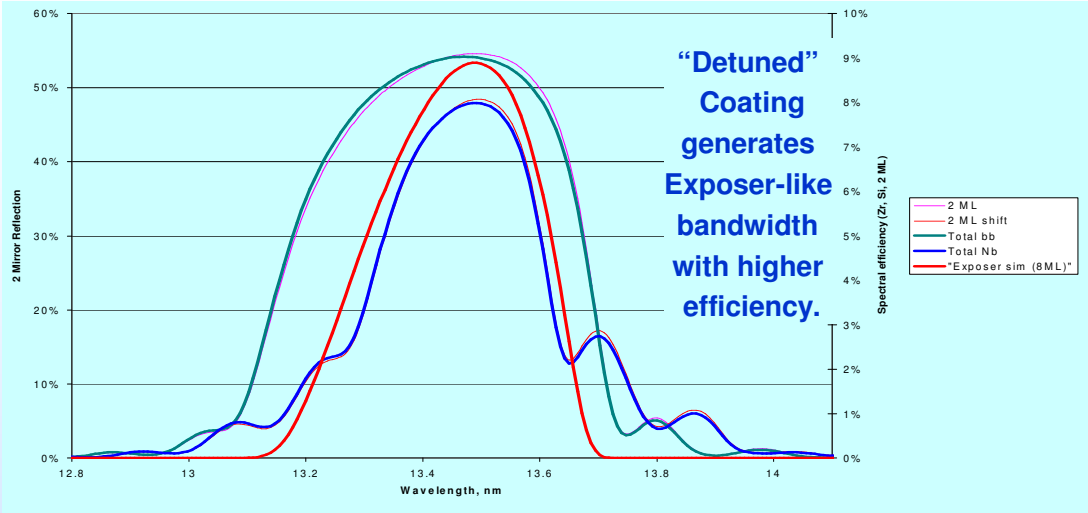

Bandwidth tuning with coating mismatch

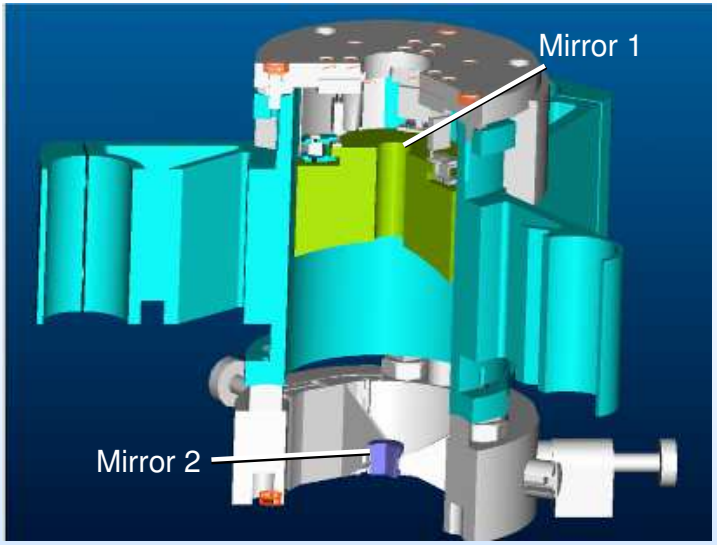

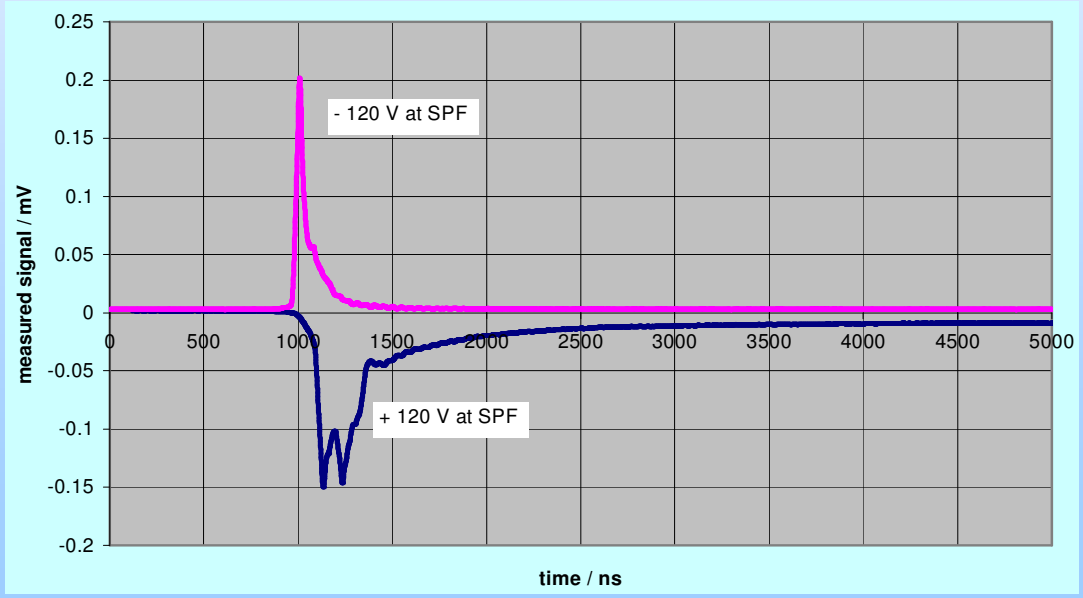

EUV-Dose Measurement with SPF window as Photodiode

EUV-Schwarzshield as realized from our partners

AIXUV GmbH
Steinbachstraße 15
52074 Aachen

Realization of prototype of integrated Resist Characterizing TOOL is ready to be realized

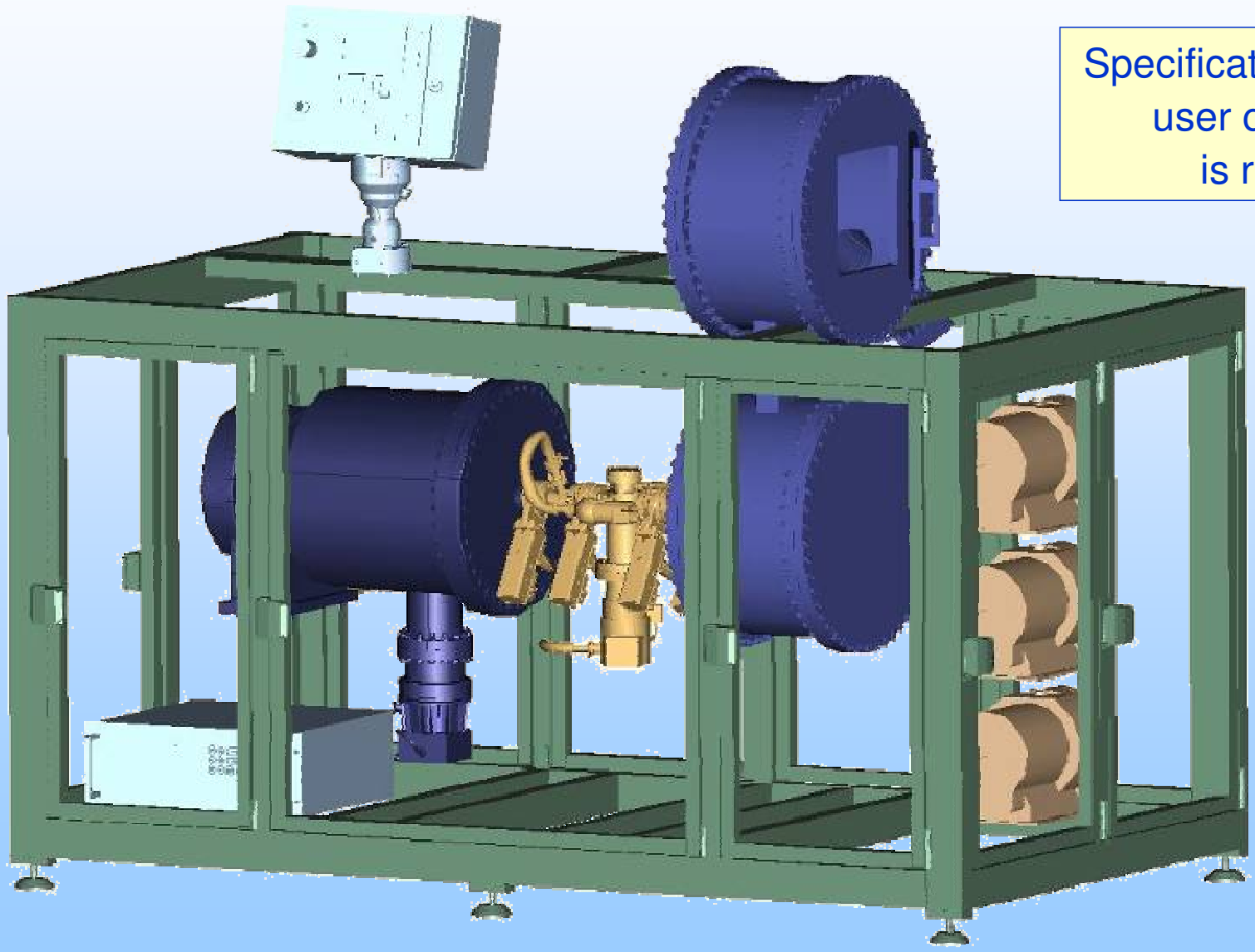

Specification Input from user community is required

AIXUV GmbH
Steinbachstraße 15
52074 Aachen