Carl Zeiss SMT AG

Optical System for EUV Microstepper

Erik Sohmen

EUVL Symposium
Miyazaki, Japan
November, 4, 2004

Optical System for EUV Microstepper

1. Overview
2. MET Projection Optics
3. Microstepper Illumination System
4. Microsteppers
5. Summary

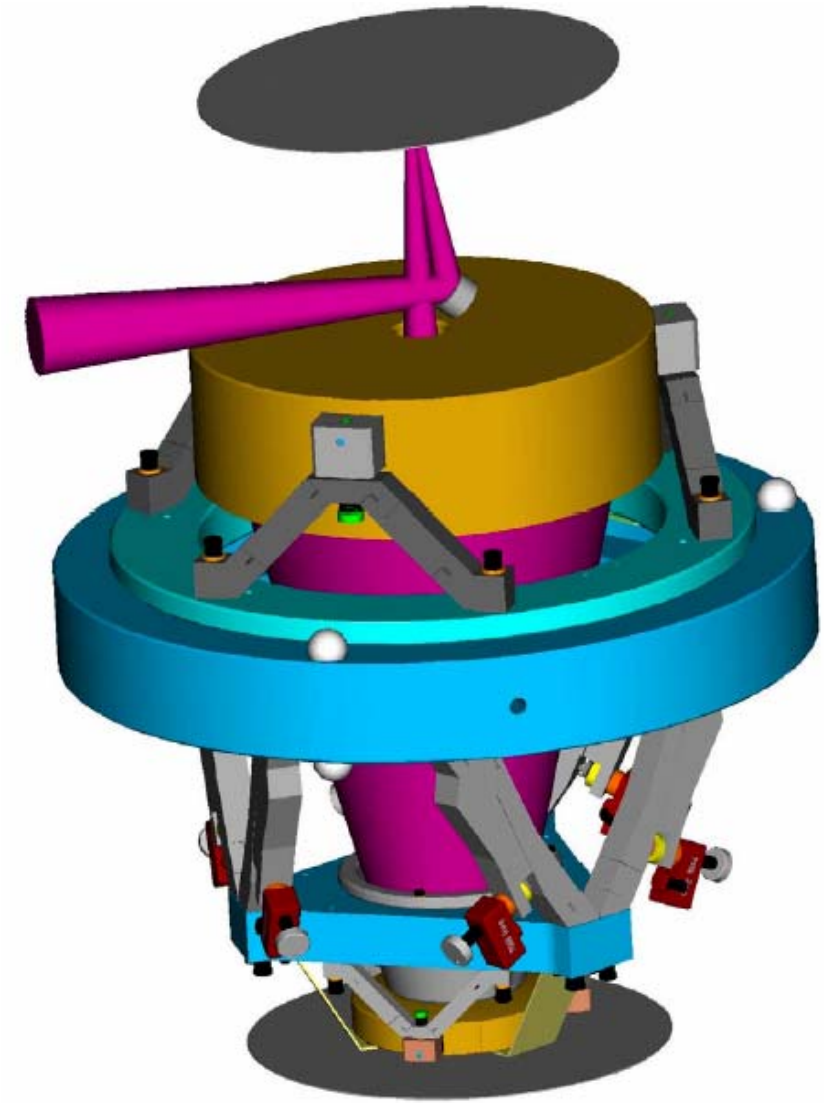

The roadmap for EUV Lithography optics

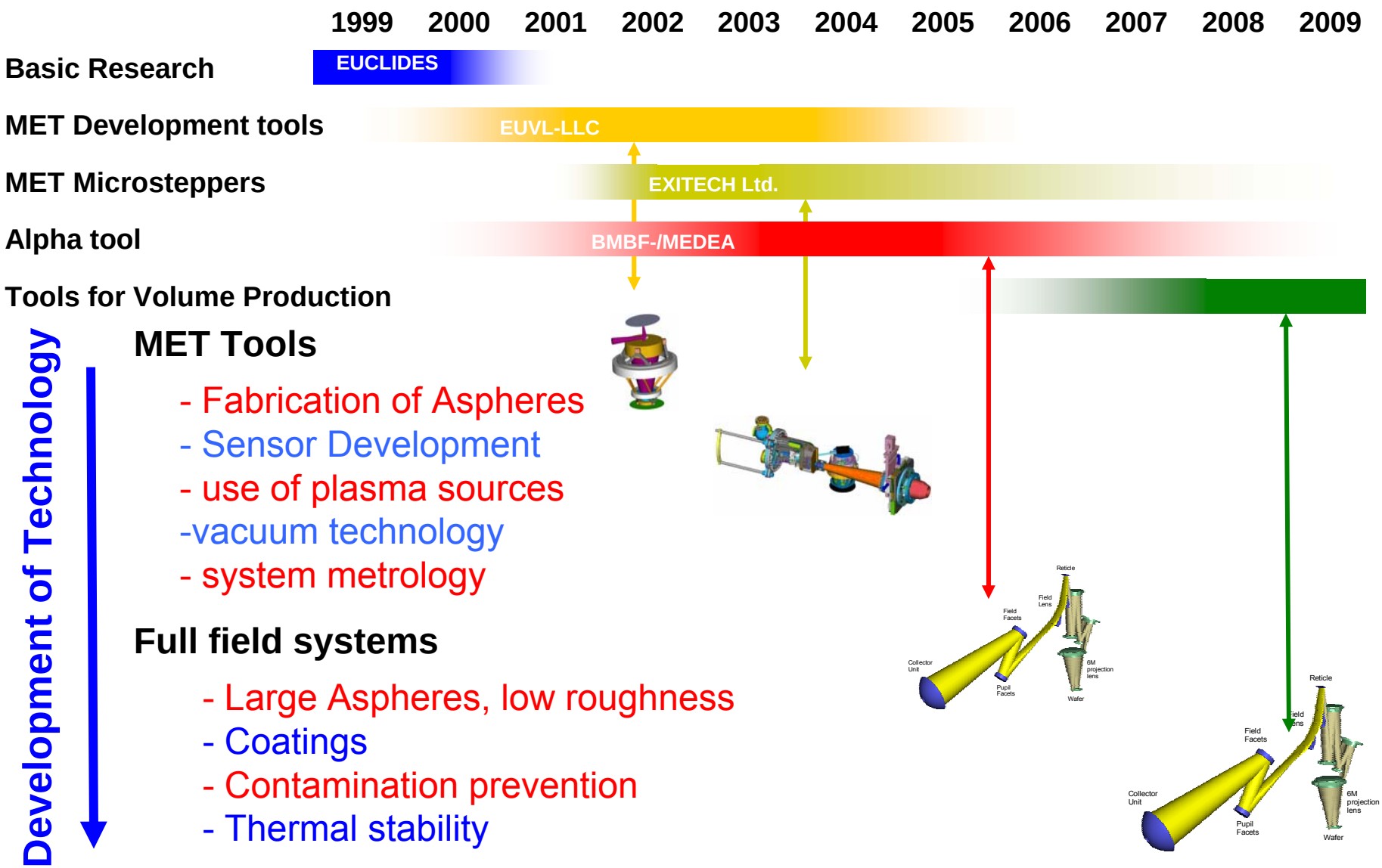

Optical System for EUV Microstepper

1. History of the Micro Exposure Tool (MET)
2. **MET Projection Optics**
   - **Design**
   - **Imaging performance**
   - **Optics Fabrication**
   - **Integration**
3. Microstepper Illumination System
4. Microsteppers
5. Summary

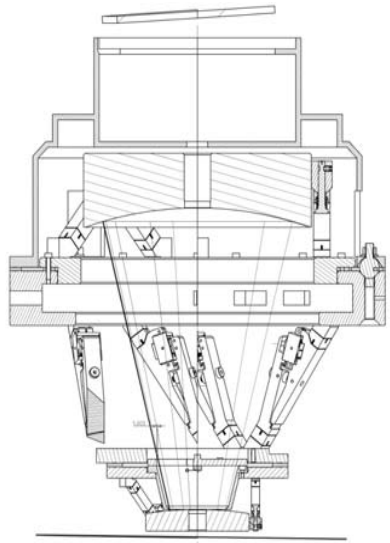

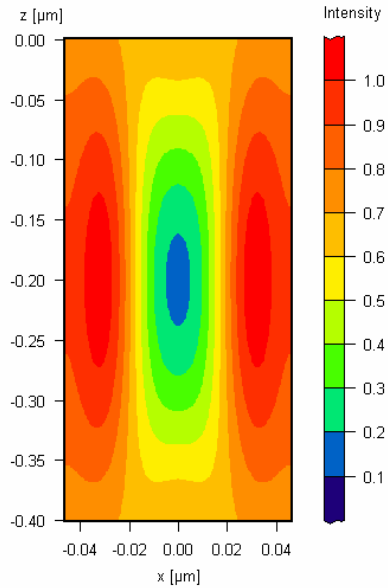

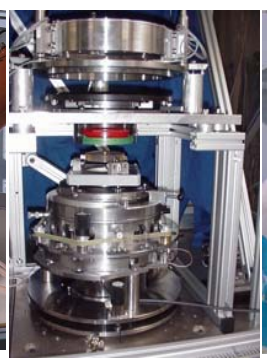

Optical Design of MET Projection Optics

MET primary

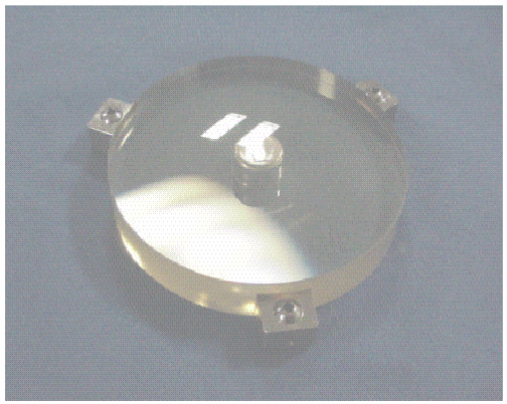

100mm

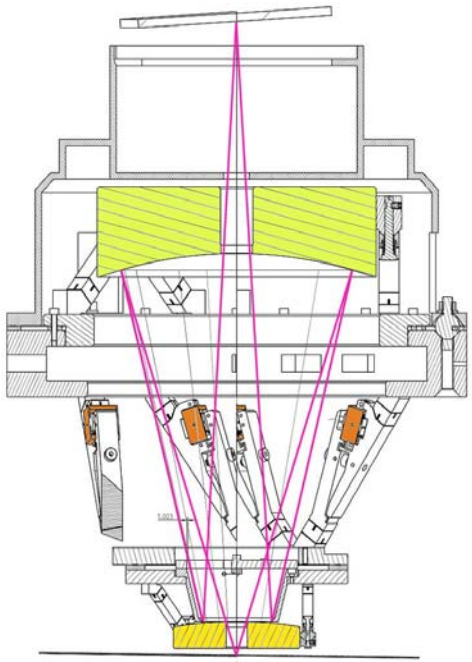

MET secondary

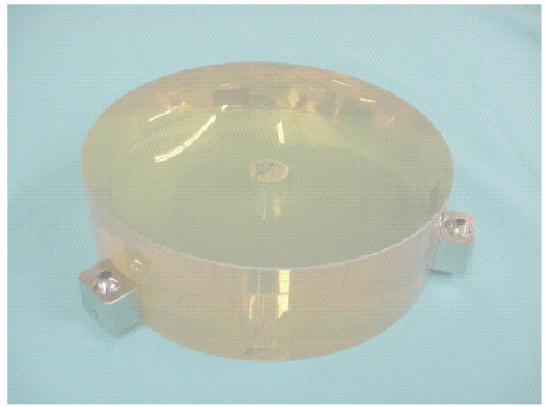

220mm

- MET originally designed by LLNL(J. Taylor, R. Hudyma, L. Hale)
- Two mirror “equal radii” design
- wavelength (fit to 6° CRA reticles @ 13.5nm) -> 13.54nm
- NA 0.3 with central Obscuration
- field size 0.6*0.6mm on wafer´, 0.2*0.6mm with full specification
- demagnification 5x

CARL ZEISS SMT

Actual Mechanical Design of MET Projection Optics

- improved shock, vibration and drift behaviour
- higher stiffness, rigid actuator fixing

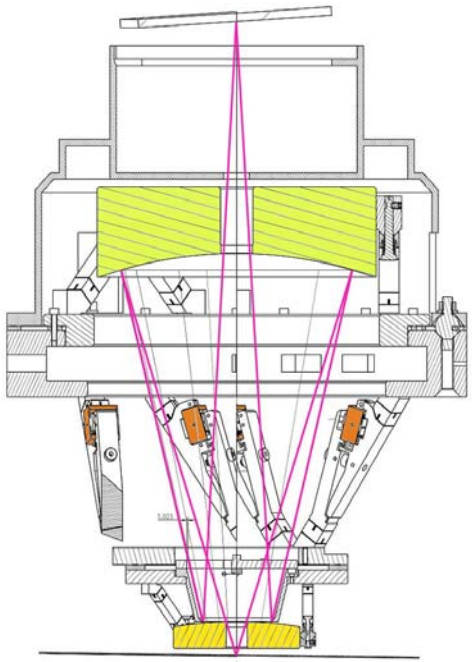

- reticle module on lens:
  - reference for reticle z position and tilt
  - field position and dose detectors
  - Shock protection for M2 mirror
- lens lower cap for Hexapod and M1 mirror protection

• wavefront error	< 1.0nm
• Distortion	200nm anamorphism, 30nm keystone, other errors
• straylight including DUV light	< 10%
• DOF for 30nm iso line	80nm
• DOF for 50nm dense lines	150nm
• DOF for 20nm dense lines	100nm (best field point)
• TFPD	< 120nm
• worst point astigmatism	< 50nm

Fabrication of MET Projection Optics

- mirror and system interferometry at 633nm,
  - 60pm repeatability
  - mirror figure and roughness: 0.2 to 0.3nm
- Coating with MoSi at FOM, Rijnhuizen
  - 65% reflectivity
- Reflectometry at PTB, Berlin
- Vacuum testing for Components and system
  - 10^{-5} mbar l/sec outgasing rate

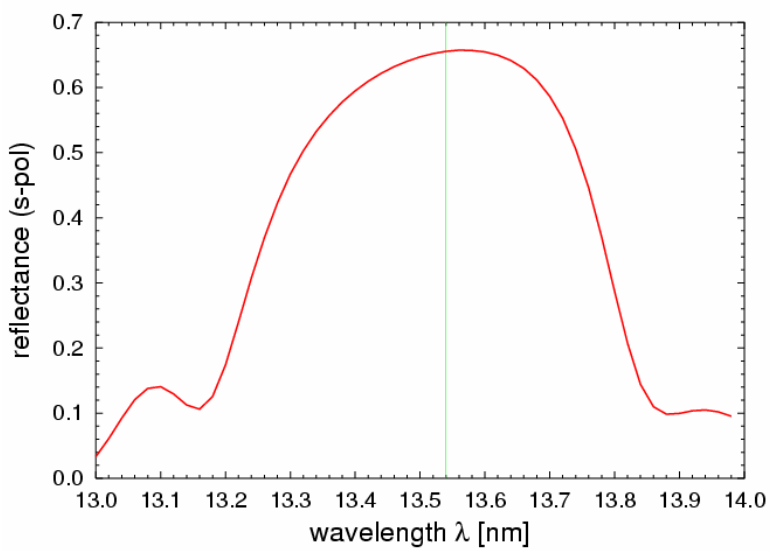

M1 **M2**

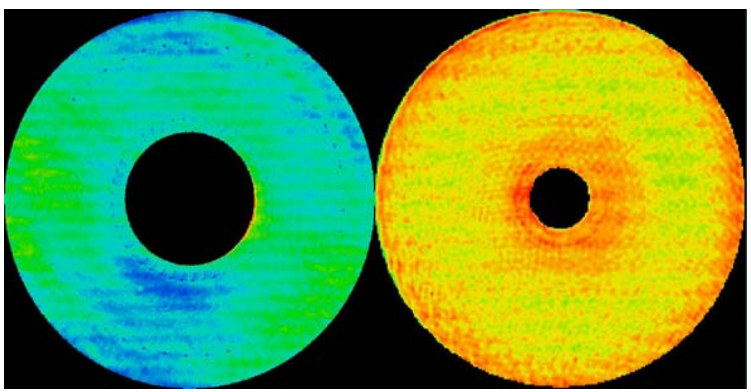

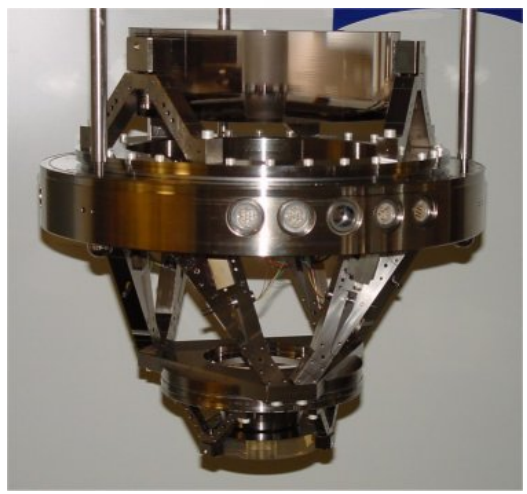

Comparison wavefront of MET projection optics

System:	MET @ BESSY	Exitech Microstepper		MET @ LBL	
Pupil wavefront	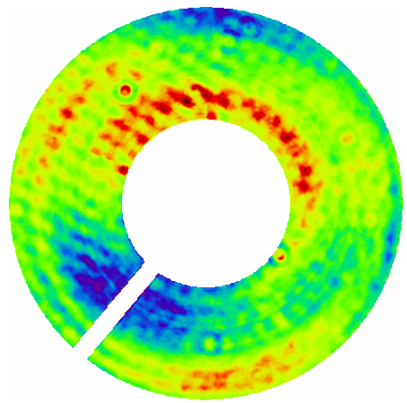	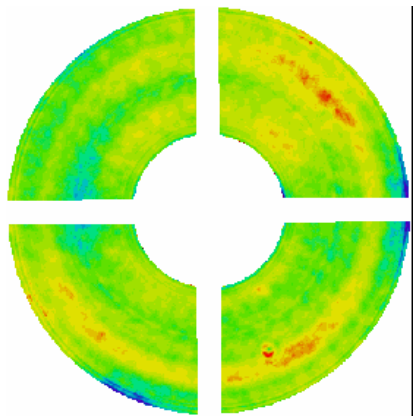		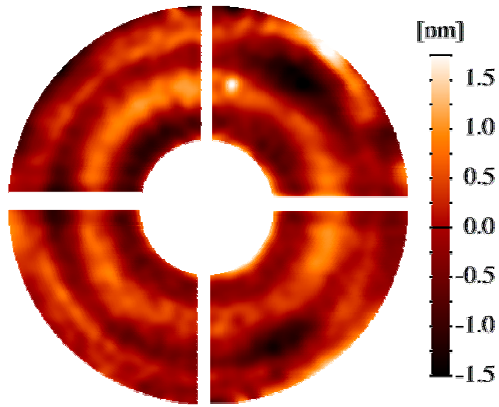	
Zernikes	CZO 633nm	CZO 633nm	after 3 months	Vis (LLNL) 532nm	EUV alignment
Total rms [nm]:	1.25	0.73	0.71		
Rms(-Z37) [nm]				0.56	0.55
Ast (rms) [nm]	0.35	0.26	0.14	0.15	0.04
Coma (rms) [nm]	0.85	0.09	0.02	0.10	0.06
3-W(rms) [nm]	0.39	0.19	0.19	0.12	0.14
Rms hos[nm]	0.37	0.41	0.46	0.49	0.37

Optical System for EUV Microstepper

1. History of the Micro Exposure Tool (MET)
2. MET Projection Optics
3. **Microstepper Illumination System**
   - **Design**
   - **Debris Concept**
   - **Sensors**
   - **Integration**
4. Microsteppers
5. Summary

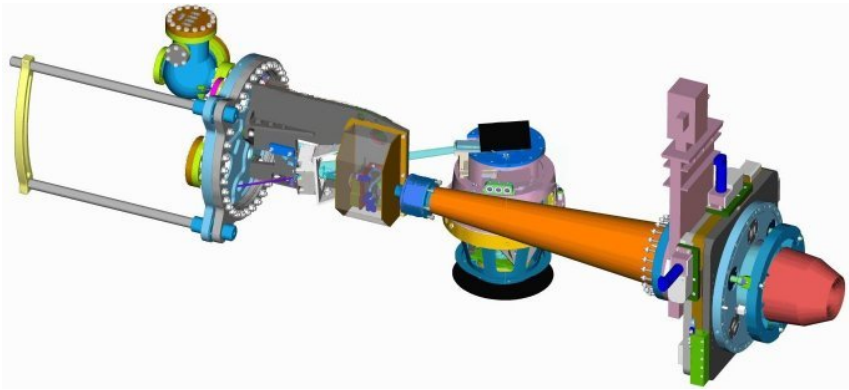

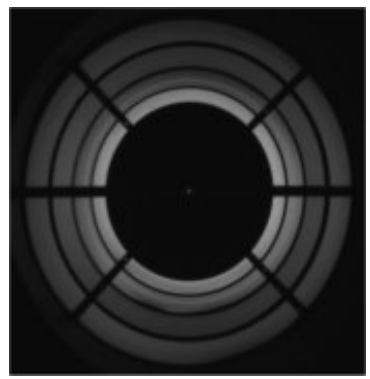

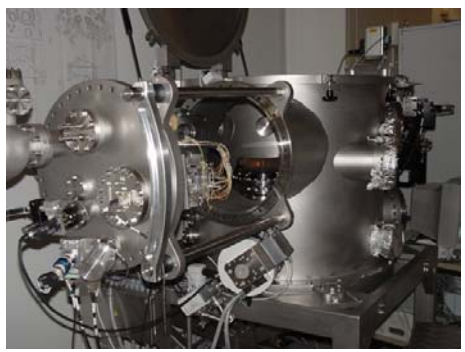

Illumination System for plasma sources: Optical Design

Source size: (XTREME)

0.5mm x 2mm (FWHM)

35W EUV in 2π

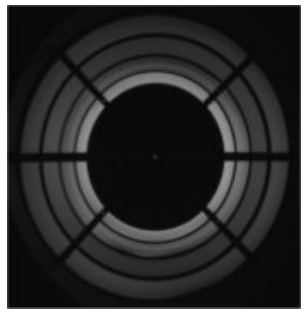

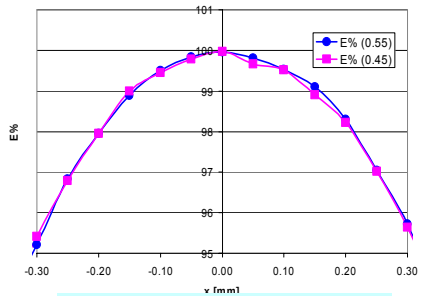

Uniformity +- 4%

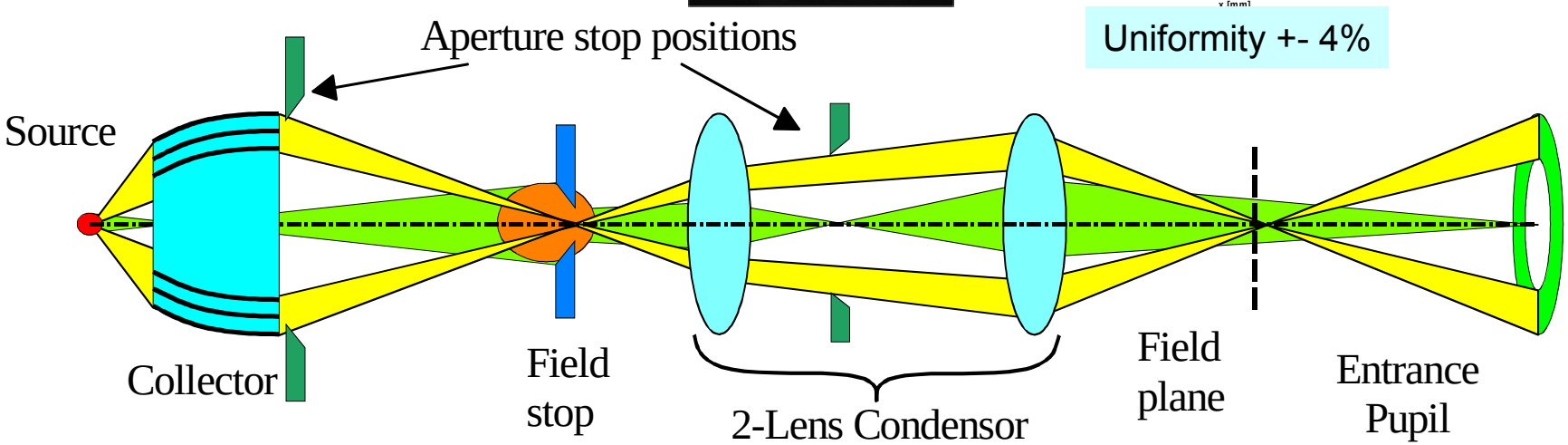

- Quasi-critical Design : Source is imaged into field plane with defocus
- Source defocus allows flexibility for different source sizes
- Collector + 2 NI-Mirrors + 2 folding mirrors only. Compact and high throughput
- Nested Wolter-Collector forms annular pupil; aperture is illuminated almost homogeneous

Microstepper-Illumination System Layout

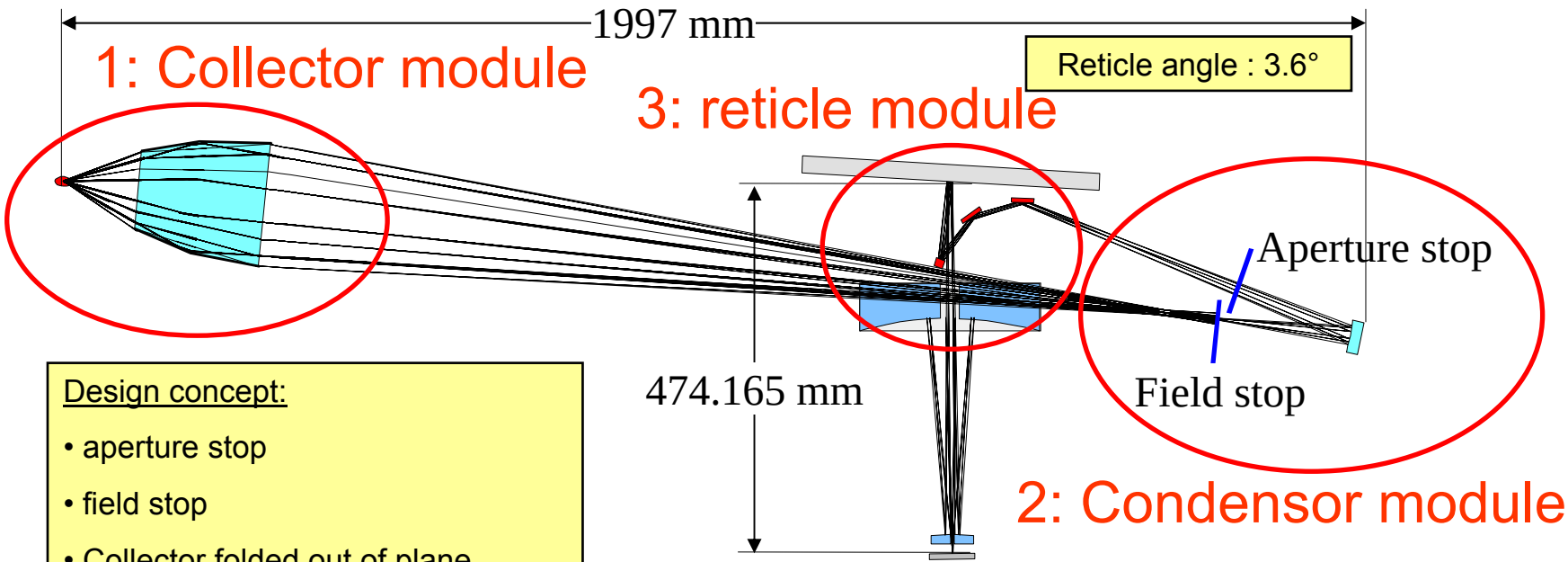

Design concept:

- aperture stop
- field stop
- Collector folded out of plane
- distances optimized for mech. Envelope
- Dose and contamination control

Power:

- 35W EUV/ 2π
- 1W @ IF
- 150µW @ wafer

Sigma settings:

- any setting between 0.35 and 0.55 by apertures
- dipole, quadrupole possible

MET Debris Mitigation Concept

- Foil-trap reduces high energy particles
- Debris tube separates source chamber from exposure chamber
- Spectral purity filter (SPF) seals source vacuum from Optics vacuum
- 10^{-3} mbar in Source chamber; 10^{-7} mbar in main chamber

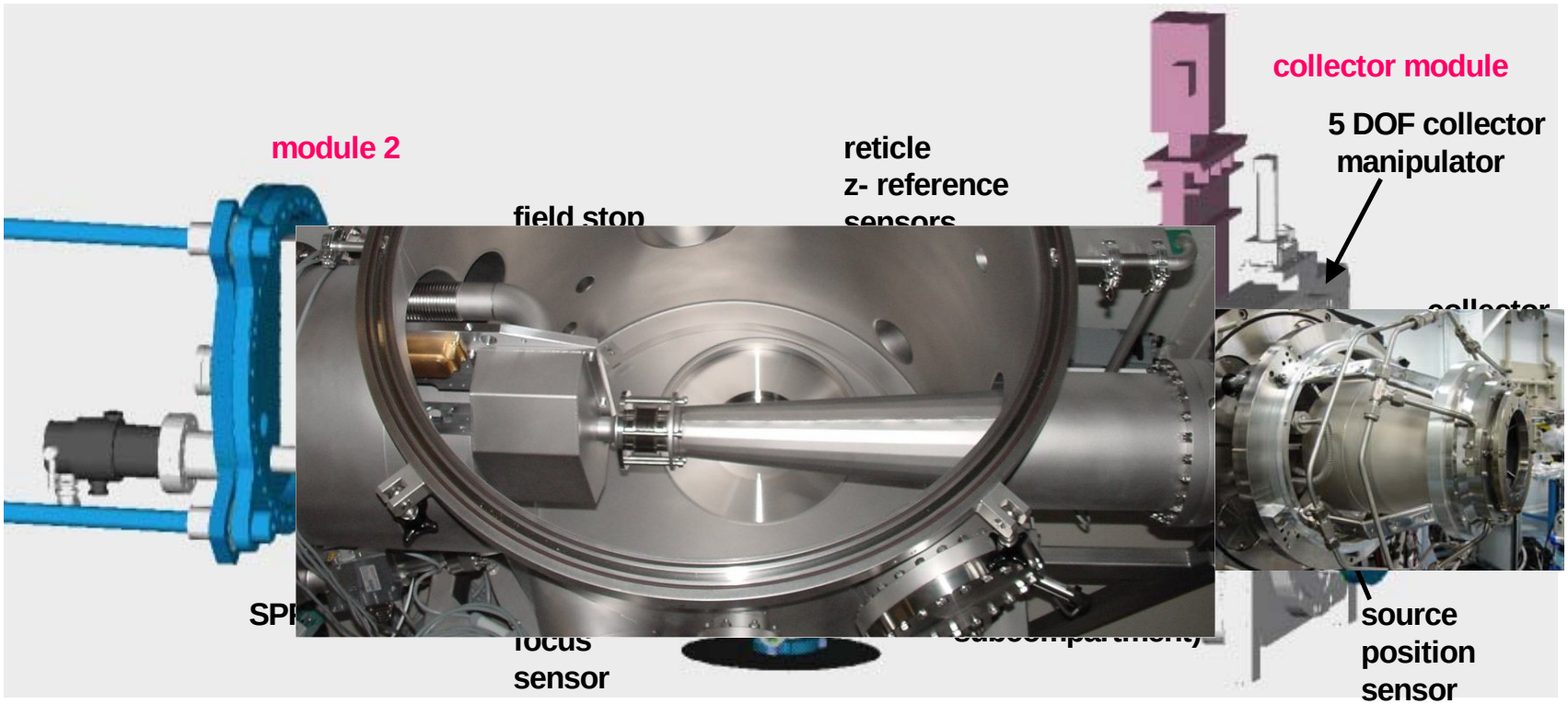

Integration

- Illumination System divided into 3 Modules
  - Collector module: accessible without venting of main system
  - Condenser Module: easy removable for service
  - Reticle Module: reference for reticle and field position
- All modules shipped in special transport system
  - Vacuum sealed with filter to for air transport
  - Damped to allow drop from 10cm height

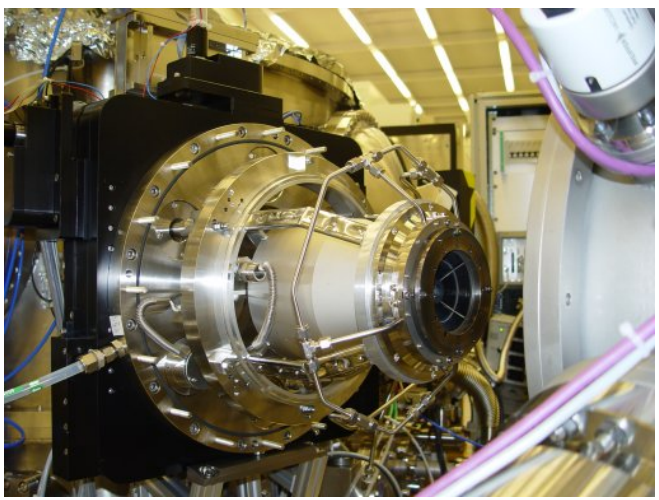

Collector module

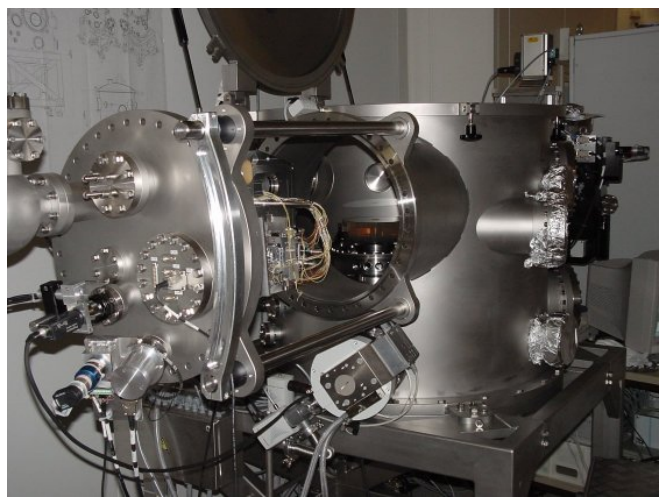

condenser module

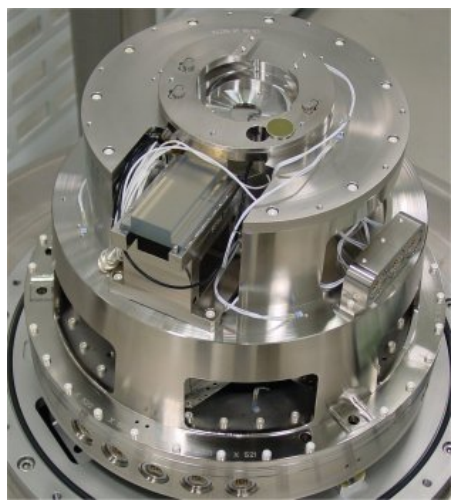

lens module

Optical System for EUV Microstepper

1. History of the Micro Exposure Tool (MET)
2. Design of MET Projection Optics
3. Design of the Microstepper Illumination System
4. Fabrication of Optics
5. **Microsteppers**
   - **PTB, BESSY2**
   - **CXRO, ALS Berkeley**
   - **Exitech Microstepper**
6. Summary

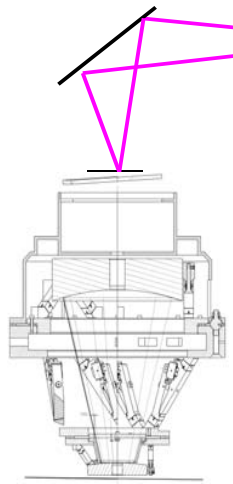

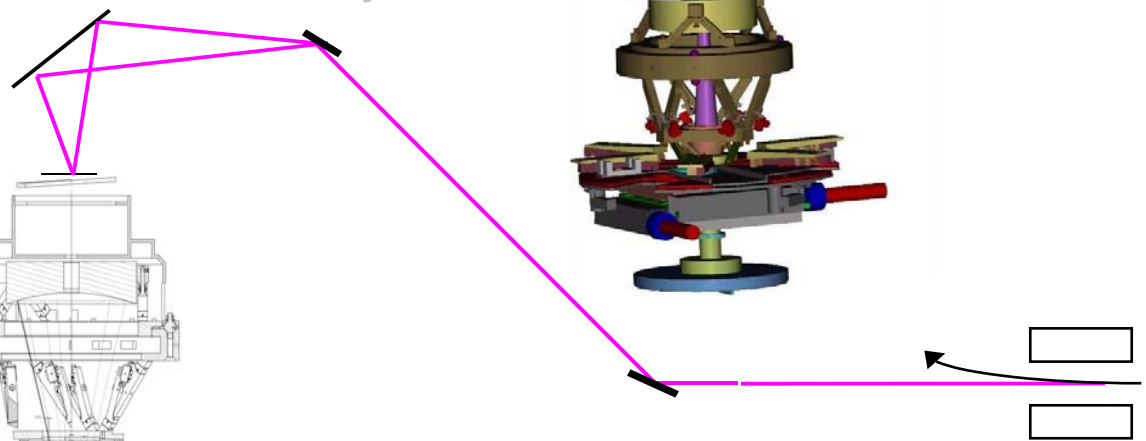

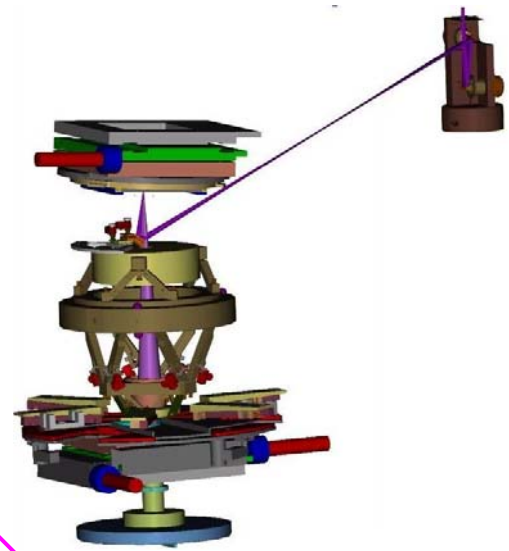

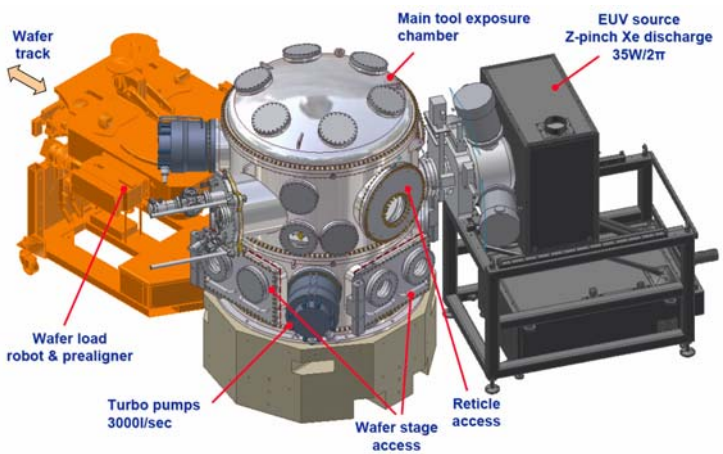

EUV MET Development tool at PTB, BESSY 2

- 100mW U180 Undulator as source
- Basic Developments for EUV
  - EUV Microscopy
    - 100nm Aerial Image resolution
  - EUV Interferometry
  - Sensors and filters qualification
    - Diode sensitivity
    - Fluorescent yield
    - Degradation and Lifetime
- Resist printing
  - 35nm (1:3 L/S) demonstrated

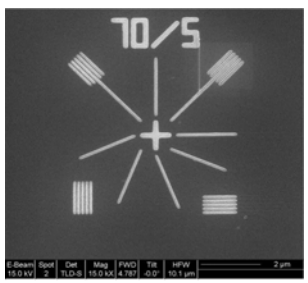

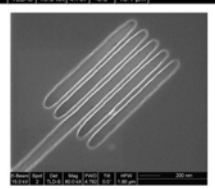

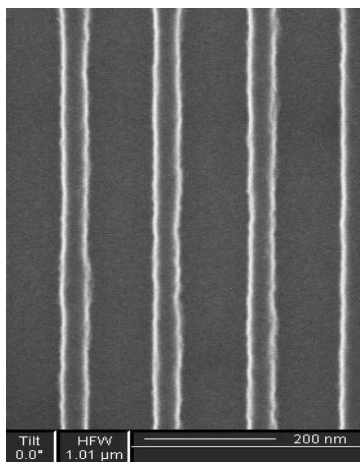

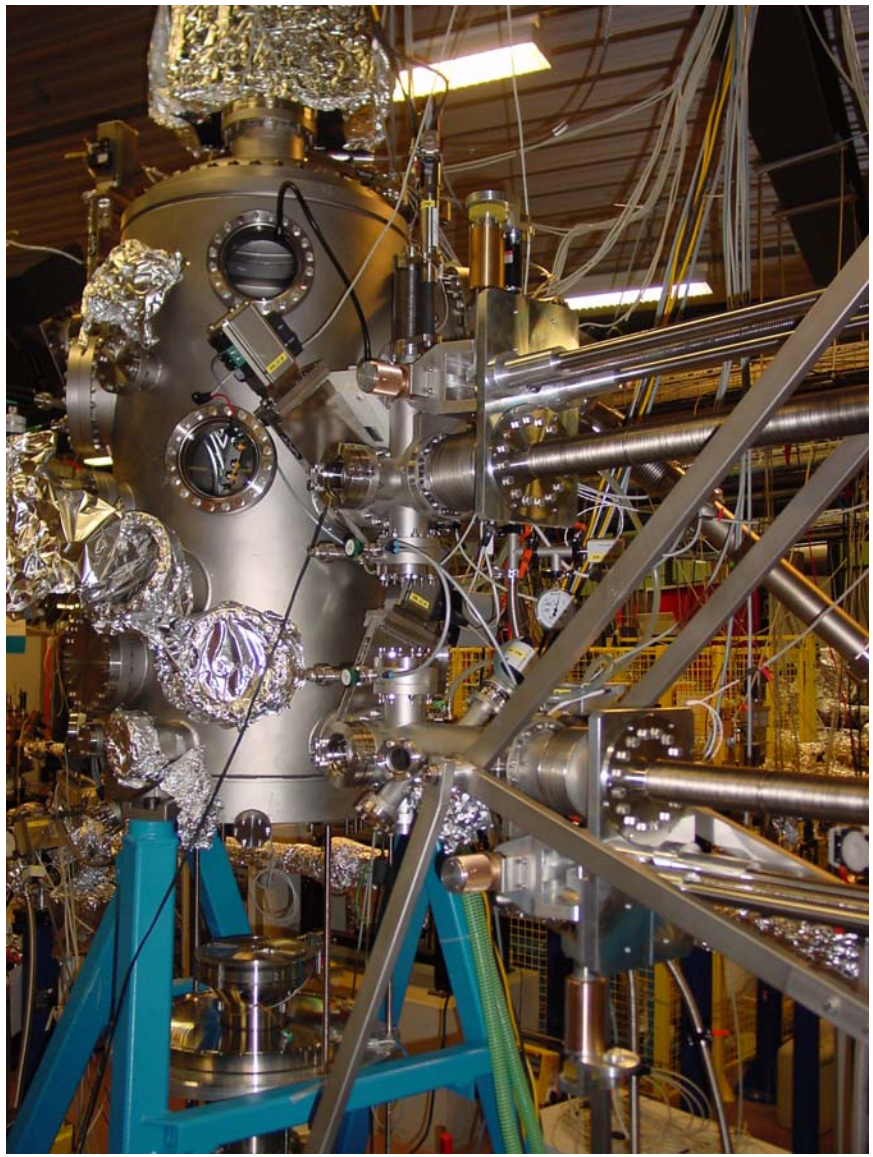

Microstepper at the ALS in Berkeley

- Undulator source
- 13nm interferometry
- Resist (K) printing

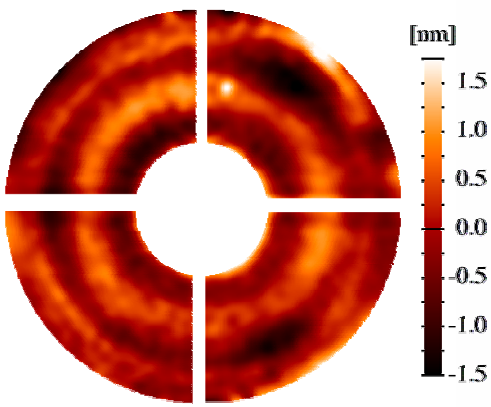

as-measured [nm

σ_{37} = **0.68**
PV = 3.54
astig. = 0.18
coma = 0.28
sph. ab. = 0.40
trifoil = 0.10
h.-o. s. = 0.30

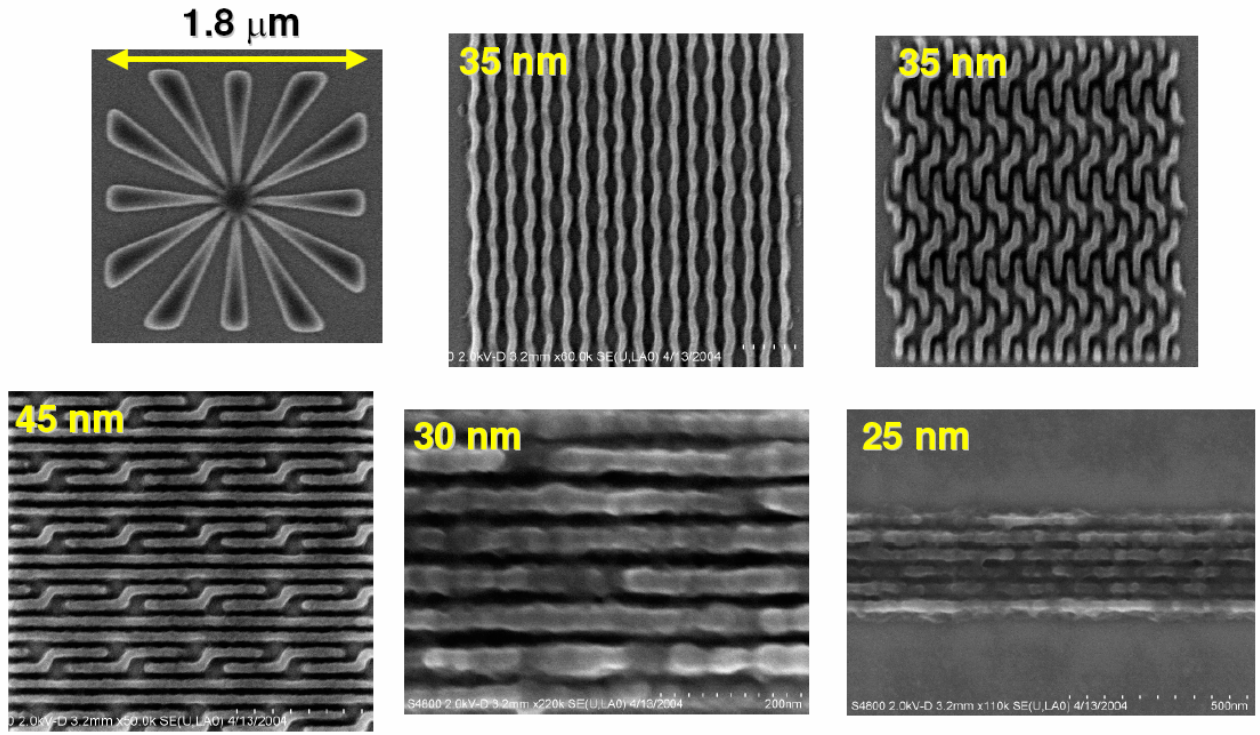

Thickness = 120 nm, Resist material provided by Robert Brainard, Rohm and Haas

Patrick Naulleau

EIPBN San Diego 2004, 6/3/04

13

"P. Naulleau, K. Goldberg, E. Anderson, J. Cain, P. Denham, K. Jackson, A. Morlens, S. Rekawa, F. Salmassi, "EUV microexposures at the ALS using the 0.3-NA MET optic," J. Vac. Sci. & Technol. B, *to be published* (2004)."

Exitech Micro Stepper with MET

- **Goal:**
  EUV Micro stepper
  for resist development
  Mask inspection
  200mm + 300mm Wafer
  Standard EUV reticle

- **Xtreme:**
  EUV source XTS 13-35
  35W EUV into 2pi @ 1kHz
  Debris Mitigation Tool

- **Zeiss:**
  MET projection optics
  illumination system for plasma source

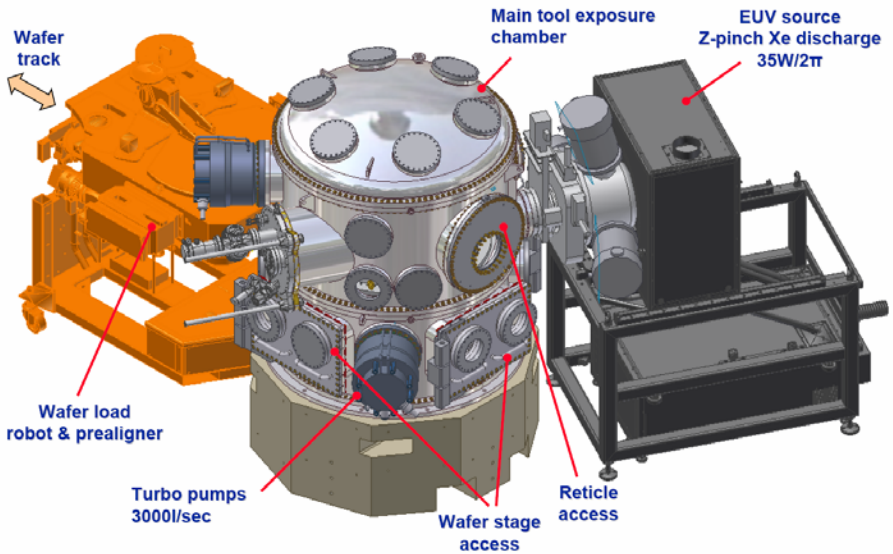

Exitech Micro Stepper with MET

- Microstepper installed
- No degradation of optics observed after 25 Mio Shots
- 50nm L/S demonstrated
- Uniformity ≈ 3%
- Wafer power: 70 Shots / mJ

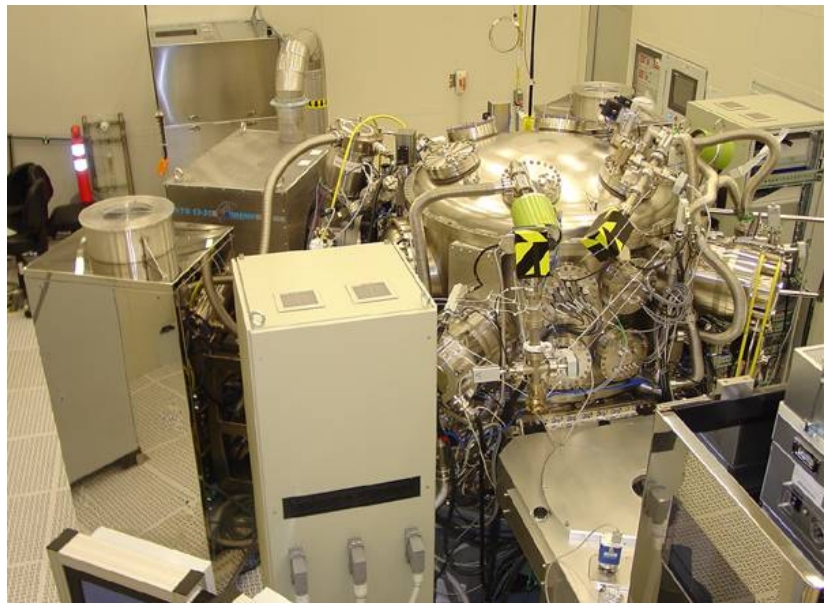

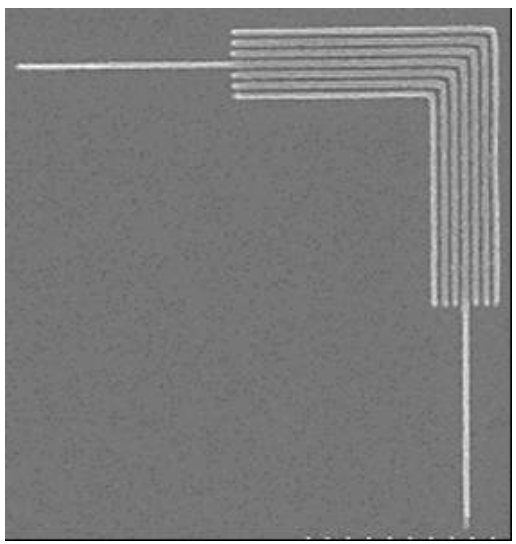

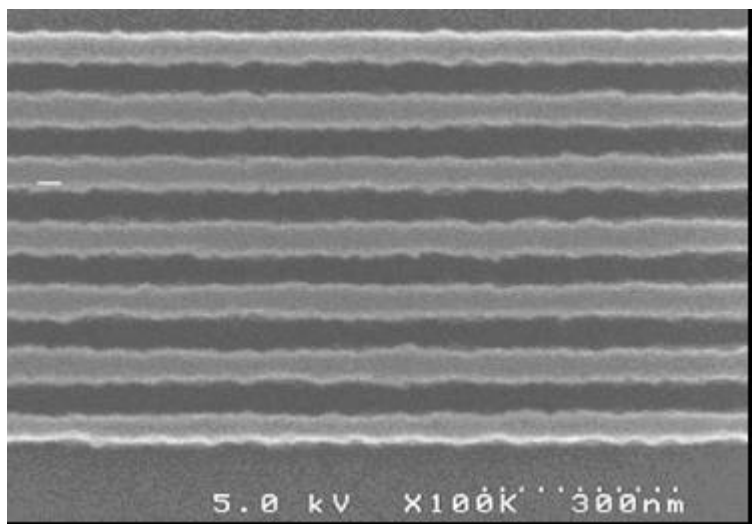

Summary

- First commercial EUV Microstepper for GDPP source
  - Available for resist testing and Mask qualification
  - Optics optimized for compact size and easy service
  - Microstepper deliverable within 12 to 18 months
- Debris mitigation concept for minimization of optics contamination
  - No Contamination on Optics detected within 25 Mio Shots
- Microstepper installed in Q3/04
- Image performance 25nm demonstrated
  - Resist currently limited to 40nm

The Team

- Martin Lowisch, Arne Dallmeyer, Wolfgang Singer, Gabriele Weihrauch, Hans-Jürgen Mann, Martin Gottschalk, Steffen Loritz, Timo Möller, Marco Lindner, Thomas Kammler, Thorsten Brändle, Johann Dorn, Thomas Haselbach, Thomas Ihl, Peter Hoppe, Michael Mauderer, Stefan Burkart, Christian Bustaus, Udo Dinger, Frank Eisert, Hubert Höfer, Wolfgang Martzy, Werner Petzold, Heinz Schiehle, Georg Schirling, Alfred Scholz, Siegfried Stacklies, Andreas Strobel, Martin Weiser, Guido Etzold, Nicole Riedelsheimer, Mario D'Onofrio, Frank Eisert, Hartmut Enkisch, Sascha Bleidistel, Markus Zenzinger, Dieter Bader, Heinz Nather, Uwe Schulz, Klaus Hinderberger, Tobias Pechtl, Roland Hahn, Robert Lagler, Wilhelm Egle, Piotr Marczuk (Carl Zeiss)
- A. Gottwald, C. Laubis, F. Scholze, R. Klein, G. Ulm (PTB)
- J. Taylor, R. Hudyma, L. Hale (LLNL)
- P. Naulleau, K. Goldberg, E. Anderson, J. Cain, P. Denham, K. Jackson, A. Morlens, S. Rekawa, F. Salmassi (LBL)
- I. Wallhead, A. Brunton, M. Whifield, J. Cashmore, P. Richards, M. Gower (Exitech)
- E. Louis, A. Yakshin, E. Zoethout, R. van de Kruijs, I. Nedelcu, F. Bijkerk (FOM)
- J. Ringling, G. Schriver, J. Kleinschmidt, J. Brudermann, U. Stamm (Xtreme)